油壓電磁比例式引導調壓閥
Proportional Electro- Hydraulic Pilot Relief Valves

- 簡化油壓系統管路，突破傳統式一段壓力一個 遙控閥的複雜管路。
- 比例式線圈可依輸人電流的大小產生無段式壓 力，更發揮液電合一的最佳功能。
- 應答性佳，壓力變化瞬間激壓極小，減小管路 共振。
- 本公司生產 CHMX 標準電子控制器 HNC-1085 提供客戶參考使用。

EDG-01-C
EDG-01-H
EDG-01-A70
EDG-01-A45

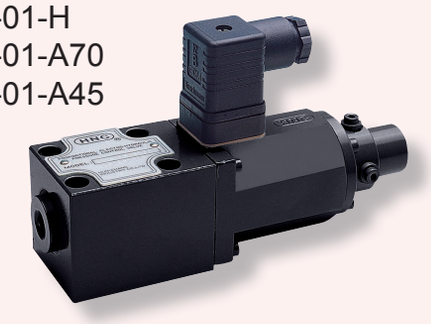

- Simplify hydraulic piping system, and improve traditional complicated piping of one pressure with one remote control valve.
- Proportional coil produces stepless type of pressure upon input current to display the best function unifying hydraulic and electronic.
- Good response function, minimum. momentary exciting pressure of pressure change to reduce piping resonance.
- CHMX Standard electronic controller HNC-1085 is recommended for customers's reference.

EDG-01-A
(背壓專用 For back Pressure control)
EDG-01-A70
EDG-01-A45

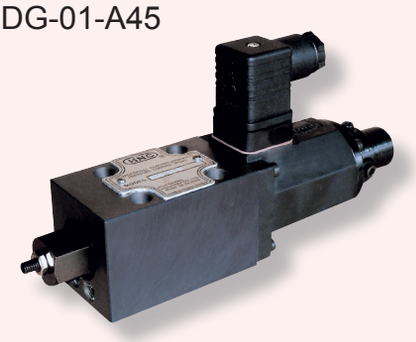

型號說明 Mode Description

EDG - 01 - C - ※
1 2 3 4

1	油壓電磁比例式引導調壓閥 **HNC Oil Pressure Electric Magnetic Proportional Guide Adjusting Valve**
2	閥門口徑 **Valve Caliber**
3	**C: 140 kg/cm^2** **H: 210 kg/cm^2**
4	製造日期 **Date Of Manufacture**

註 (1) 油回管盡量減少阻力，單獨使用一條管路直接插人油箱油面以下。
(2) 以上表列是配合本公司生產 **HNC-1085** 標準電子控制器及 **2 ℓ /min** 油泵單一閥門測試結果。
(3) **EDG-01-A** 背壓專用型。
(1) The resistance in the return pipe should be reduced by using one piping seperately and insert directly inside the oil tank.
(2) The left chart is comply with our standard electronic controlier HNC-1085 and 2 ℓ/min oil pump, single valve test result
(3) EDG- 01- A for back pressure control.

油壓電磁比例式引導調壓閥
Proportional Electro- Hydraulic Pilot Relief Valves

使用說明注意事項/ Care in Application

安裝位置
正確的閥門安裝位置是必需使放氣孔朝上以便試車時排出油路中的空氣，若配合另外主閥一同使用時，引導管路請不要超過 **30** 公分，以達壓力更穩定。

空氣排除
將圓後蓋朝上的放氣孔螺絲打開（請將系統壓力調在 30 kg/cm^2) 讓空氣排出，當閥內充滿油而不見再有氣泡後，將螺絲再鎖緊。

手動調壓螺絲
當電氣控制發生故障時，而臨時需要壓力供應，此刻 可將手動調整螺絲順時針旋人即可；平時則復歸原位 。

回油管路
回油背壓盡量低油管末端直接插人油槽油面以下。

Place For Installation
Correct valve installation place is to put the bleeder upword in order to eliminate the presence of air in the oil pressage when it have a trial ranming;if use together with another main valve, the guide piping can not exceed 30 cm to make the pressure be more steady .

Elimination Of Air (Air Vent)
Turn the bleeder on the upword position, then open the screw (Adjust system pressure to 30 kg/cm^2) eliminating the air, then lock tightly the screw when there is no bubble but full of oil in valve.

Hand-adjusting Screw
When the electric control is disorder and need to supply pressure occassionally, then just need to turn the hand - adjusting screw in clockwise direction. Restore to the origin at usual time.

Drain
Insert the return back pressure on the end of low oil pipe directly to the place under the oil level of oil tank.

規格 / Specification

說明 Description		EDG - 01	
最高使用壓力 Max.Operating pressure	kg/cm^2	210	
最大通過流量 Max. Flow	ℓ/min	2	
壓力調整範圍 Pressure Adjusting Range	kg/cm^2	C	8- 140
		H	10- 210
容許背壓 Allowable Back-Pressure	kg/cm^2	註（1）	
定額電流 Rated Current	mA	C	750
		H	700
線圈阻抗 Coil Resistance	Ω	10	
磁滯 Magnetic Hysteresis	%	< 3	
再現性 Repeatability	%	< 0.5	
重量 Weight	kg	2	

外部尺寸圖/ External Size Drawing

EDG - 01

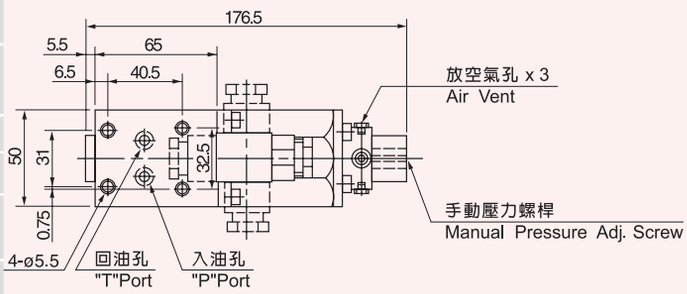

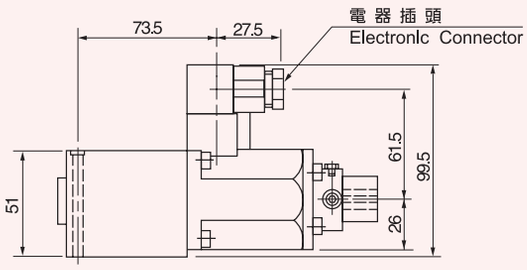

油壓電磁比例式引導調壓閥
Proportional Electro- Hydraulic Pilot Relief Valves

入力電流－壓力特性 / Input Current V.S. Pressure

EDG - 01(C)

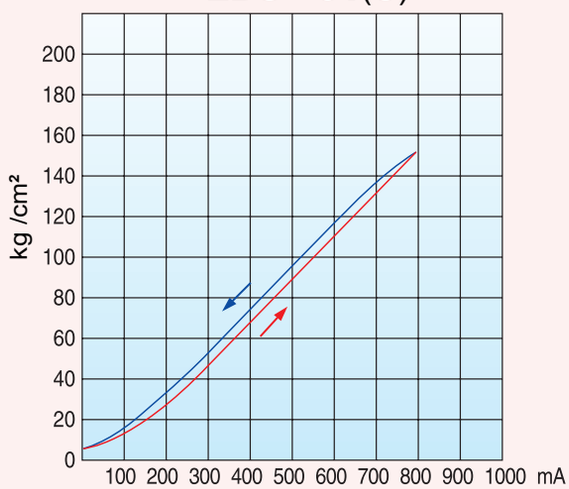

EDG - 01(H)

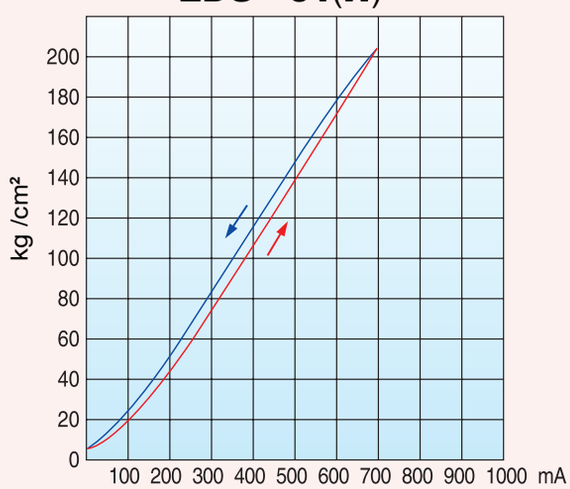

測試條件

油泵 3ℓ /min，油溫 45°C，液壓油粘度 45CST，HNC 專用電子控制器 HNC-1085，單一閥門油路系統測試。

Test Condition:

Oil pump 3ℓ /min, Oil Temperature 45°C, hydraulic pressure oil viscosity 45CST, HNC Exclusive electric controller HNC-1085, single-valve oil passage system test.

底板圖 / Sub - Plates

EDG - 01

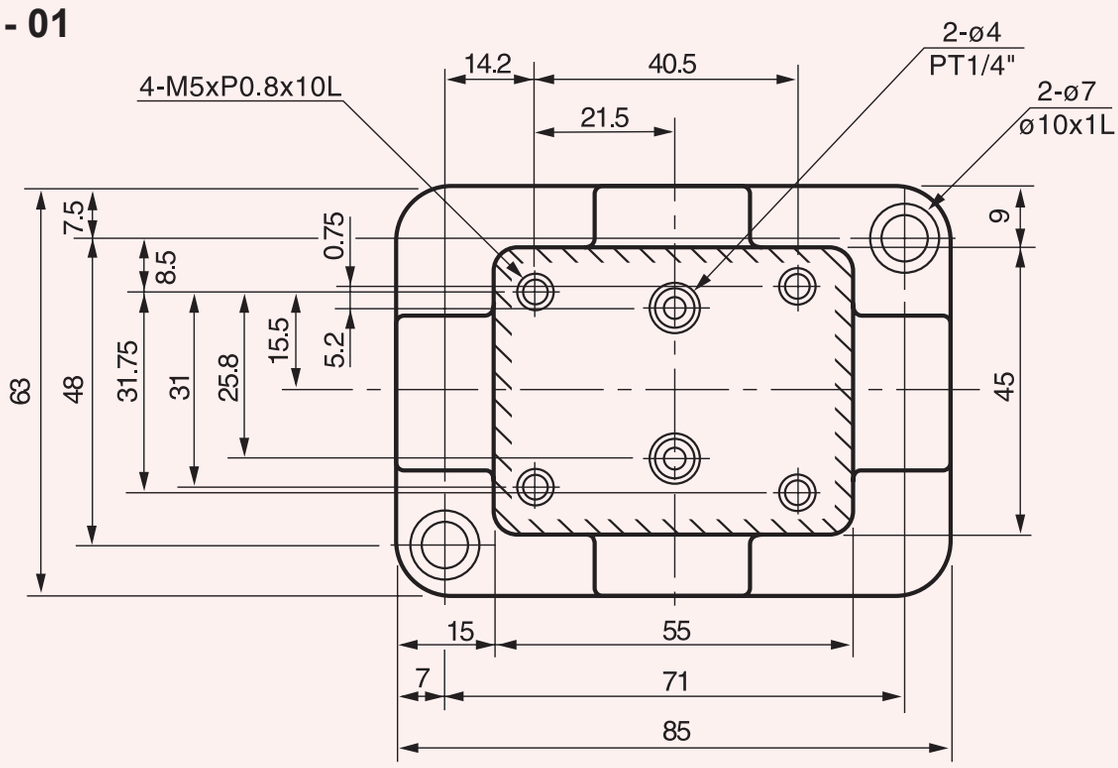

油壓電磁比例式調壓閥
Proportional Electro- Hydraulic Relief Valves

- EBG 閥壓力穩定，低噪音。
- 適合一般傳統式及微電腦式電氣控制，可達液電合一最佳功能。
- 精度高，微調容易，壓力變換瞬間激壓小。
- 本公司生產 CEED, 標準電子控制器 HNC - 1085 提供客戶參考使用。

- EBG valve pressure is steady with low noise.
- Good for general traditional and micro-computer electric control to reach the best function of unifying hydraulic electronic.
- High - precision, easy micro - adjusting, small pressure shift momentary excisting pressure.
- HNC Standard electronic controller HNC - 1085 is recammended for customers's reference.

EBG-03
EBG-06
EBG-10

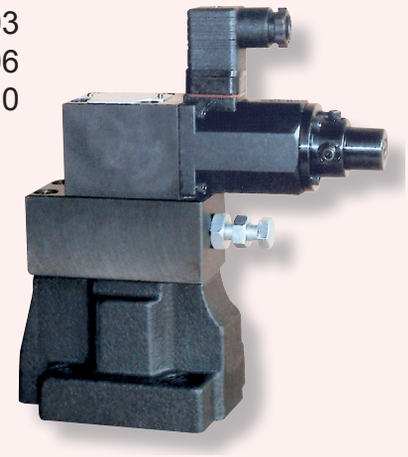

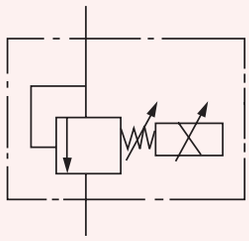

EBG

型號說明 Mode Description

EBG - 03 - C - ※
1 2 3 4

1	油壓電磁比例式調壓閥 **HNC Oil Pressure Electric Magnetic Proportional Guide Adjusting Valve**
2	閥門口徑 **Valve Caliber 03 , 06 , 10**
3	**C: 140 kg/cm^2 A: 70 kg/cm^2** **H: 210 kg/cm^2 A: 45 kg/cm^2** （背壓專用）**For Back Pressure Control.**
4	製造日期 **Date Of Manufacture**

註 (1) 回油管盡量減少阻力，單獨使用一條管路直接插入油箱油面以下。
(2) 以上表列是配合本公司生產 **HNC - 1085** 標準電子控制器，單一閥門測試結果。
(1) The resistance in the retern pipe should be reduced by using one piping seperately and insert directly inside the oil tank.
(2) The left chart is comply with our standard electronic controller HNC - 1085, single valve test result.

油壓電磁比例式調壓閥
Proportional Electro- Hydraulic Relief Valves

使用說明注意事項 / Care in Application

安裝位置
放氣孔必須朝上（如圖 A 說明），若遇到閥門必須垂直安裝時，請聯絡本公司商洽。

空氣排除
為使壓力穩定，管路中及閥門內的空氣必須完全排除，使用朝上的放氣孔，將放氣孔螺絲打開使空氣排出，直到沒有氣泡後再將螺絲鎖緊。

手動調壓螺絲
當電氣控制發生故障時，而臨時需要壓力供應時，此刻可將手動調壓螺絲順時針旋人即可；平時則復歸原位。

回油管路
單獨直接將回油管插入油箱的油面以下避免管路曲折或有限流現象。

最高安全壓力設定
依實際油泵吐出量及實際使用壓力而決定，通常在油泵 100 ℓ/min 以下時，追加 15 kg/cm^2 即可。

Place of Installation
The bleeder has to be placed upword (As the following drawing described. When the valve has to be installed perpendicuarly, please contact us .

Elimination Of Air (Air Vent)
To stabilize the pressure, the air in pipe passage and valve has to be emilinated. Place the bleeder upword then open the screw of bleeder and emilinate the air away till there is no bubble, and then lock tightly the screw .

Hand-adjusting Pressure Screw
When electric control is disorder and need to supply pressure occassionally, then just to turn the hand - adjusting pressure screw in clockwise direction. Restore it to the origin at usual time

Drain
The resistance in the refurn pipe should be reduced by using one piping seperately and insert directly inside the oil tank.

Highest Safety Pressure Design
It is demanded upon actual oil pump disorption and actual use pressure, just fine when oil pump is less than 100 ℓ/min，super add 15 kg/cm^2 is recommended.

規格 / Specification

說明 Description			EBG - 03	EBG - 06	EBG - 10
最高使用壓力 Max. Operating Pressure	kg/cm^2		210		
最大通過流量 Max. Flow	ℓ/min		100	200	400
壓力調整範圍 Pressure Adjusting Range	kg/cm^2	C	8- 140		
		H	10- 210		
容許背壓 Allowable Back-Pressure	kg/cm^2		註（1）		
定額電流 Rated Current	mA	C	750		
		H	700		
線圈阻抗 Coil Resistance	Ω		10		
磁滯 Magnetic Hysteresis	%		< 3		
再現性 Repeatability	%		< 0.5		
重量 Weight	kg		7.1	8.3	10.7

油壓電磁比例式調壓閥
Proportional Electro- Hydraulic Relief Valves

底板圖 / Sub - Plates (mm)

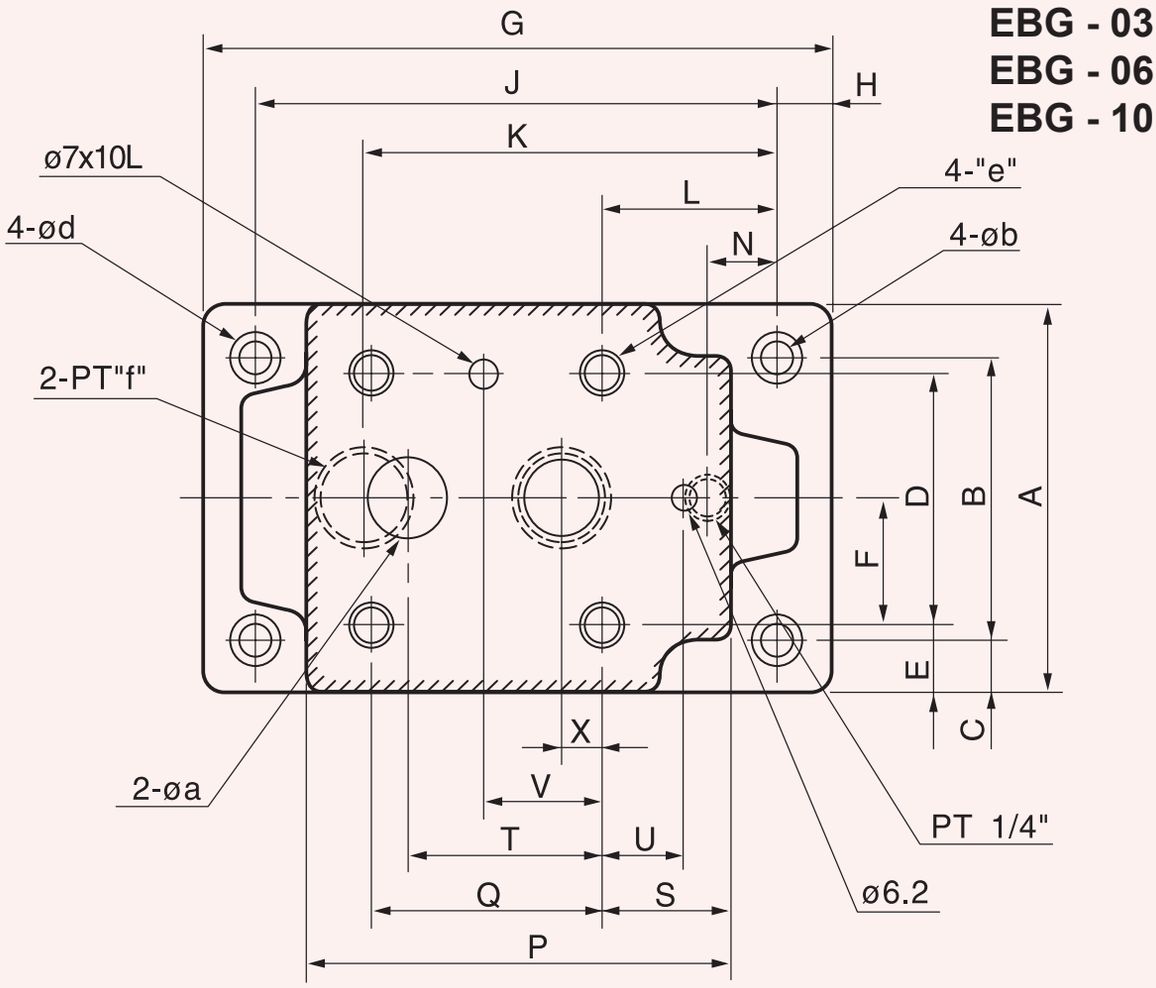

底板尺寸 / Sub - Plates Size (mm)

符號 Symbol	A	B	C	D	E	F	G	H	J	K	L	N	P	Q
BGM- 03	86	60	13	53.8	3	26.9	149	13	123	86	32	26 21	97	53.8
BGM- 06	108	78	15	70	4	35	180	15	150	106.5	51	27.2 18	121	66.7
BGM- 10	126	94	16	82.6	5.7	41.3	227	16	195	138.2	62	30.2 17	154	88.9

符號 Symbol	S	T	U	V	X	Y	Z	a	b	d	e	f
BGM- 03	19	47.4	0	22	22	32	20	14.5	11	17.5	M12 螺絲 深 20 Screw Depth 20	3/8" 1/2"
BGM- 06	37	55.5	23.8	33.4	11	40	25	23	13.5	21	M16 螺絲 深 25 Screw Depth 25	3/4" 1"
BGM- 10	42	76.2	31.8	44.5	12.7	50	32	28	17.5	26	M20 螺絲 深 28 Screw Depth 28	1 1/4" 1 1/2"

油壓電磁比例式調壓閥
Proportional Electro- Hydraulic Relief Valves

外部尺寸 (圖 A) / External Size Drawing (A) (mm)

EBG - 03
EBG - 06
EBG - 10

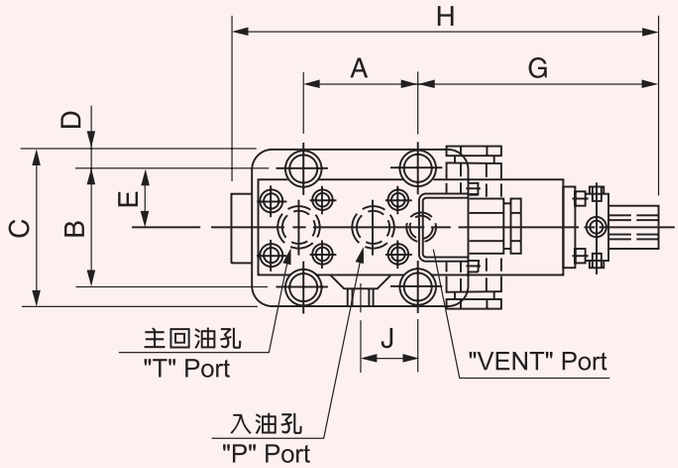

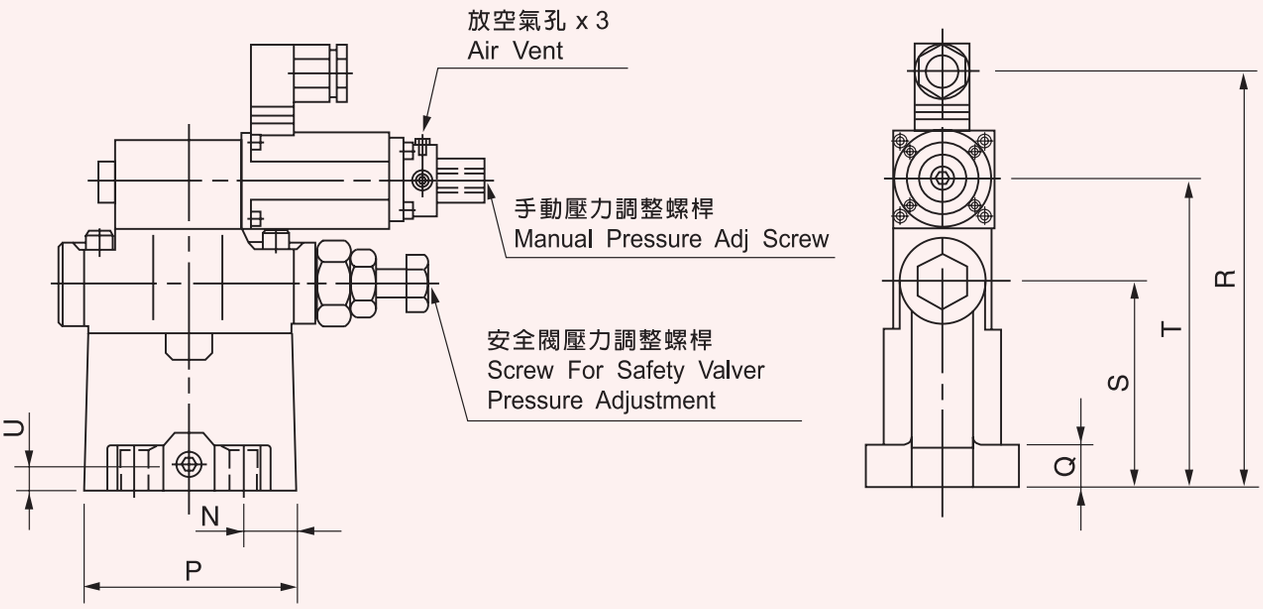

外部尺寸 / External Size (mm)

符號 Symbol	A	B	C	D	E	G	H	J	N	P	Q	R	S	T	U
BGM- 03	53.8	53.8	76	11	27	115	206	27	26	106	21.5	219	105	152	13
BGM- 06	66.7	70	98	14	35	117	210	33	36	124	26	220	105	153	13
BGM- 10	89	82.6	120	18.7	41.3	122	225	45	45	155	36	246	132	178	13

油壓電磁比例式調壓閥
Proportional Electro- Hydraulic Relief Valves

入力電流 － 壓力特性 / Input Current V.S. Pressure

EBG-03(H)

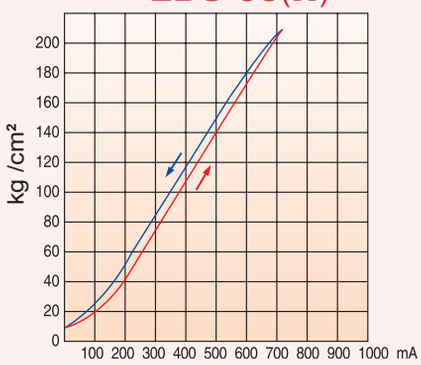

EBG-06(H)

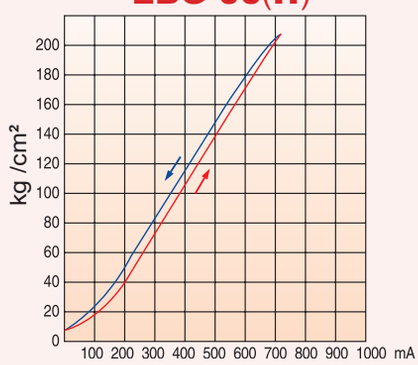

EBG-10(H)

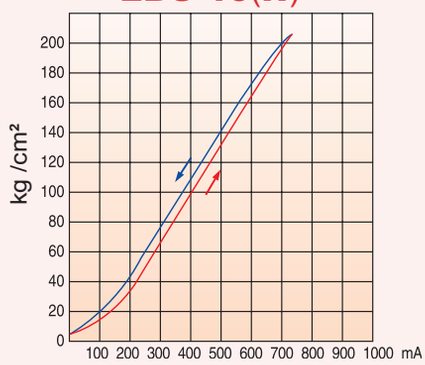

EBG-03(C)

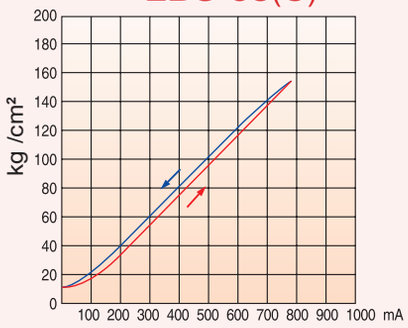

EBG-06(C)

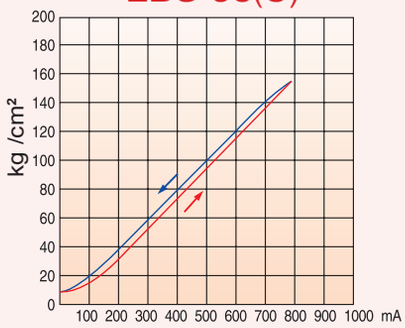

EBG-10(C)

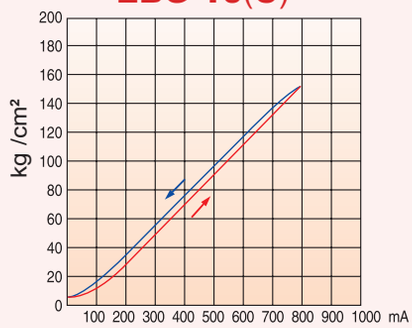

測試條件：

油泵 60 l/ min (03)，120 ℓ/ min (06)，250 ℓ/ min (10)，油溫 45°C，液壓油粘度 45 CST，HNS 專用電子控制器 HNC - 1085，單一閥門油路系統測試。

Test Condition：

Oil Pump 60 ℓ/min(03), 120 ℓ/ min (06), 250 ℓ/min(10), oil Temperature 45°C, hydraulic pressure oil viscosity 45CST, HNC Exclusive electric controller HNC - 1085, single - valve oil passage system test.

OMAX

油壓電磁比例式壓力 & 流量複合閥
Proportional Electro- Hydraulic Relief And Flow Valves

EFBG - 03 - 125 - C

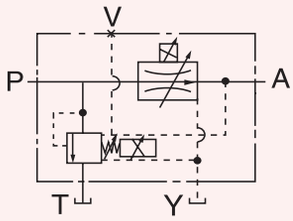

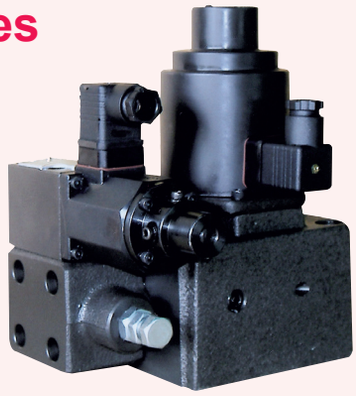

EFBG - 03 - 125A - C
EFBG - 03 - 160 - C
EFBG - 03 - 60 - C
(規格外另議 Custom made)

型號說明 Mode Description

EFBG - 03 - 125 - C - ※
1 2 3 4 5

1	油壓電磁比例式引導調壓閥 **HNC Oil Pressure Electric Magnetic Proportional Guide Adjusting Valve**
2	閥門口徑 **Valve Caliber**
3	最大通過流量 **Max. Flow Passed**
4	**C: 140 kg/cm^2** **H: 210 kg/cm^2**
5	設計號碼 **Design No.**

註 (1) 回油管盡量減少阻力，單獨使用一條管路直接插入油箱油面以下。
(2) 以上表列是配合本公司生產 HNC - 4075/HNC - 1085，標準電子控制器及 125 ℓ/min 油泵，單一閥門測試結果。
(1) The resistance in the return pipe should be reduced by using one piping seperately and insert directly inside the oil tank.
(2) The left chart is comply with our standard electronic controller HNC - 4075, HNC - 1085, standard electronic controller 125 ℓ/min, single valve test result.

使用說明注意事項 / Care in Application

安裝位置
放氣孔位置可自由調整，請將其方向朝上，以方便排出管路及閥門內的空氣。

回油管路
回油管路盡可能避免有限流現象，盡可能減少背壓。
手動調壓（壓力、流量）螺絲。
當電氣故障時，臨時應變使用，平時則復歸原位。

空氣排除
為達壓力穩定，速度切換靈敏，將管路及閥門內的空氣完全排出是相當重要的（參照 **EDG - 01**）。

最高安全壓力設定
請參照 **EBG - 06**

Place For Installation
The place of bleeder can be adjusted freely and put the direction upside avilably to eliminate the air in pipe passage and valve.

Drain
The return oil pipe passage should be avoided having flowed friction condition but reduce back pressure as possible.

Hand-adjusting (Pressure, Flow) Screw (bar)
When electric control is disorder and need to supply pressure occassionally, then just to turn the hand-adjusting pressure screw (bar) in clockwise direction. Restore it to the origin at usual time.

Elimination Of Air (Air Vent)
In order to stabilize the pressure and make speed shift acuteiy. it is very important to emilinate completely the air in pipe passage and valve. (refer to EDG - 1).

Highest safety pressure set
Refer to EBG - 06

油壓電磁比例式壓力 & 流量複合閥
Proportional Electro- Hydraulic Relief And Flow Valves

規格 / Specification

	說明 Description		EDG - 03
最高使用壓力 Max. Operating pressure		kg/cm²	210
流量系統 Flowing System	最大通過流量 Max. Flow	ℓ/min	125
	流量調整範圍 Flow Adjusting Range	ℓ/min	1 ～ 125
	閥門內部阻抗（A-B) Valve Internal Resistance	kg/cm²	5
	定額電流 Rated Current	mA	750
	線圈阻抗 Coil Resistance	Ω	40
	磁滯 Magnetic Hysteresis	%	< 7
	再現性 Repeatability	%	< 3

規格 / Specification

	說明 Description		EDG - 03	
壓力系統 Pressure System	壓力調整範圍 Pressure Adjusting Range	kg/cm²	C	140
			H	210
	容許背壓 Allowable Back- Pressure	kg/cm²	註 (1)	
	定額電流 Rated Current	mA	C	750
			H	700
	線圈阻抗 Coil Resistance	Ω	10	
	磁滯 Magnetic Hysteresis	%	< 3	
	再現性 Repeatability	%	< 1	
	重量 Weight	kg	18	

底板圖 / Sub - Plates (mm)

EFBG - 03 - 125

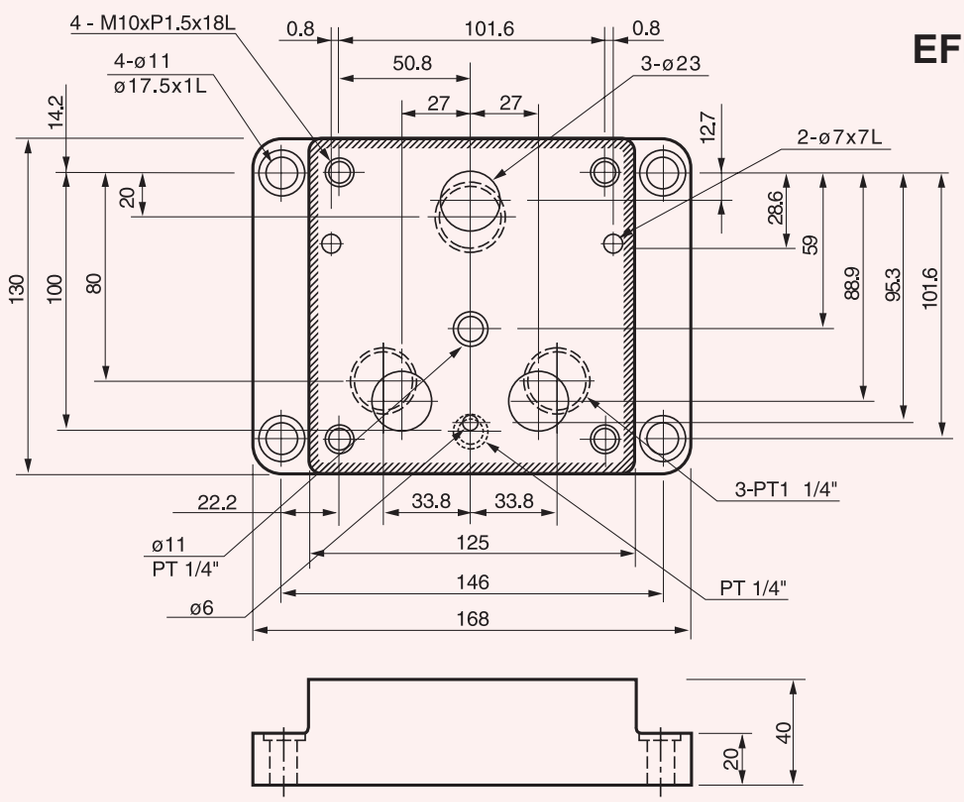

油壓電磁比例式壓力 & 流量複合閥
Proportional Electro- Hydraulic Relief And Flow Valves

入力電流 – 流量特性 / Input Current vs. Flow

EFBG-03-125

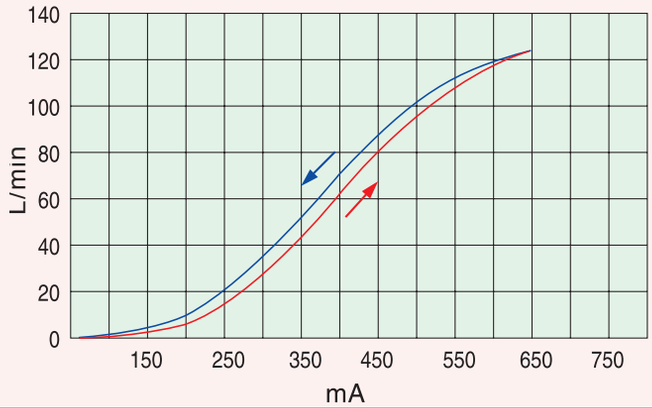

入力電流 – 壓力特性 / Input Current vs. Pressure

EFBG-03 (C)

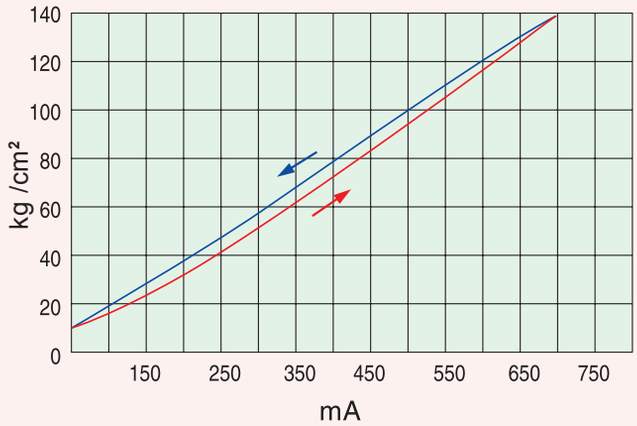

外部尺寸 (圖 A) / External Size Drawing (A) (mm)

EFBG-03-125

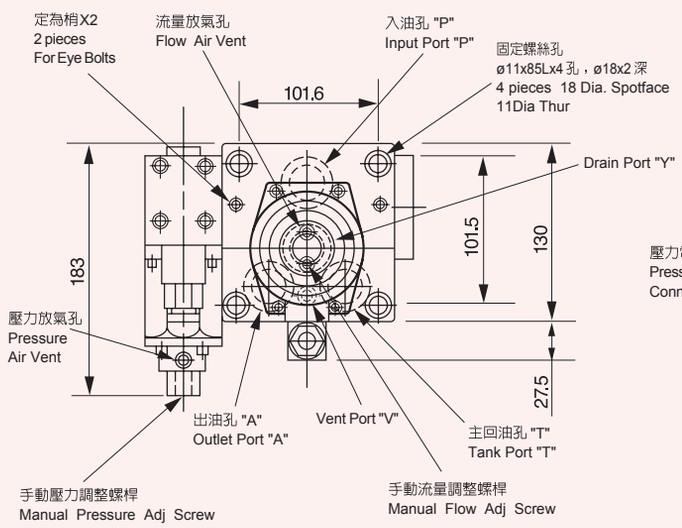

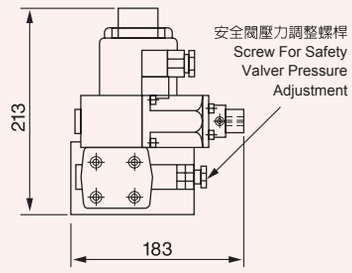

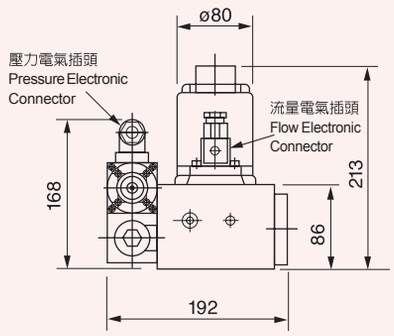

油壓電磁比例式壓力 & 流量複合閥
Proportional Electro- Hydraulic Relief And Flow Valves

EFBG - 06 - 250 - C

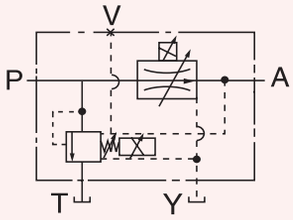

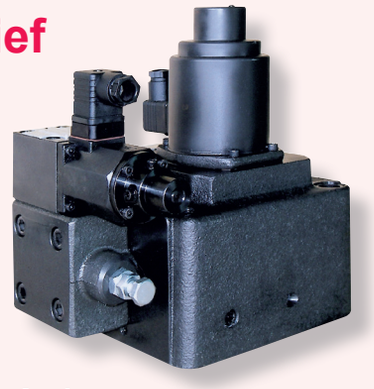

EFBG - 06 - 300 - C
EFBG - 03 - 350 - C
(規格外另議 Custom made)

型號說明 Mode Description

EFBG - 06 - 250 - C - ※

1 2 3 4 5

1	油壓電磁比例式複合閥 **HNC Oil Pressure Electric Magnetic Proportional Compound Valve**
2	閥門口徑 **Valve Caliber**
3	最大通過流量 **Max. Flow Passed**
4	**C: 140 kg/cm^2** **H: 210 kg/cm^2**
5	設計號碼 **Design No.**

註 (1) 回油管盡量減少阻力，單獨使用一條管路直接插入油箱油面以下。
(2) 以上表列是配合本公司生產 HNC- 4075/HNC- 1085，標準電子控制器及 250 ℓ/min 油泵，單一閥門測試結果。
(1) The resistance in the return pipe should be reduced by using one piping seperately and insert directly inside the oil tank.
(2) The left chart is comply with our standard electronic controller HNC - 4075, HNC - 1085, standard electronic controller 250 ℓ/min, single valve test result.

使用說明注意事項 / Care in Application

安裝位置
放氣孔位置可自由調整，請將其方向朝上，以方便排出管路及閥門內的空氣。

回油管路
回油管路盡可能避免有限流現象，盡可能減少背壓。
手動調壓（壓力、流量）螺絲。
當電氣故障時，臨時應變使用，平時則復歸原位。

空氣排除
為達壓力穩定，速度切換靈敏，將管路及閥門內的空氣完全排出是相當重要的（參照 **EDG - 01**）。

最高安全壓力設定
請參照 **EBG - 06**

Place For Installation
The place of bleeder can be adjusted freely and put the direction upside available to eliminate the air in pipe passage and valve.

Drain
The return oil pipe passage should be avoided having flowed friction condition but reduce back pressure as possible.

Hand-adjusting (Pressure, Flow) Screw (bar)
When electric control is disorder and need to supply pressure occassionally, then just to turn the hand-adjusting pressure screw (bar) in clockwise direction. Restore it to the origin at usual time.

Elimination Of Air (Air Vent)
In order to stabilize the pressure and make speed shift actuely, it is very important to eliminate completely the air in pipe passage and valve. (refer to EDG - 1).

Highest Safety Pressure Set
Refer to EBG - 06

油壓電磁比例式壓力 & 流量複合閥
Proportional Electro- Hydraulic Relief And Flow Valves

規格 / Specification

	說明 Description		EFBG - 06
最高使用壓力 Max. Operating Pressure		kg/cm²	210
流量系統 Flowing System	最大通過流量 Max. Flow	ℓ/min	125
	流量調整範圍 Flow Adjusting Range	ℓ/min	2 ～ 250
	閥門內部阻抗（A-B) Valve Internal Resistance	kg/cm²	5
	定額電流 Rated Current	mA	750
	線圈阻抗 Coil Resistance	Ω	40
	磁滯 Magnetic Hysteresis	%	< 7
	再現性 Repeatability	%	< 1

規格 / Specification

	說明 Description		EBG - 03	
壓力系統 Pressure System	壓力調整範圍 Pressure Adjusting Range	kg/cm²	C	140
			H	210
	容許背壓 Allowable Back- Pressure	kg/cm²	註 (1)	
	定額電流 Rated Current	mA	C	750
			H	700
	線圈阻抗 Coil Resistance	Ω	10	
	磁滯 Magnetic Hysteresis	%	< 3	
	再現性 Repeatability	%	< 1	
	重量 Weight	kg	33	

底板圖 / Sub - Plates (mm)

EFBG - 06 - 250

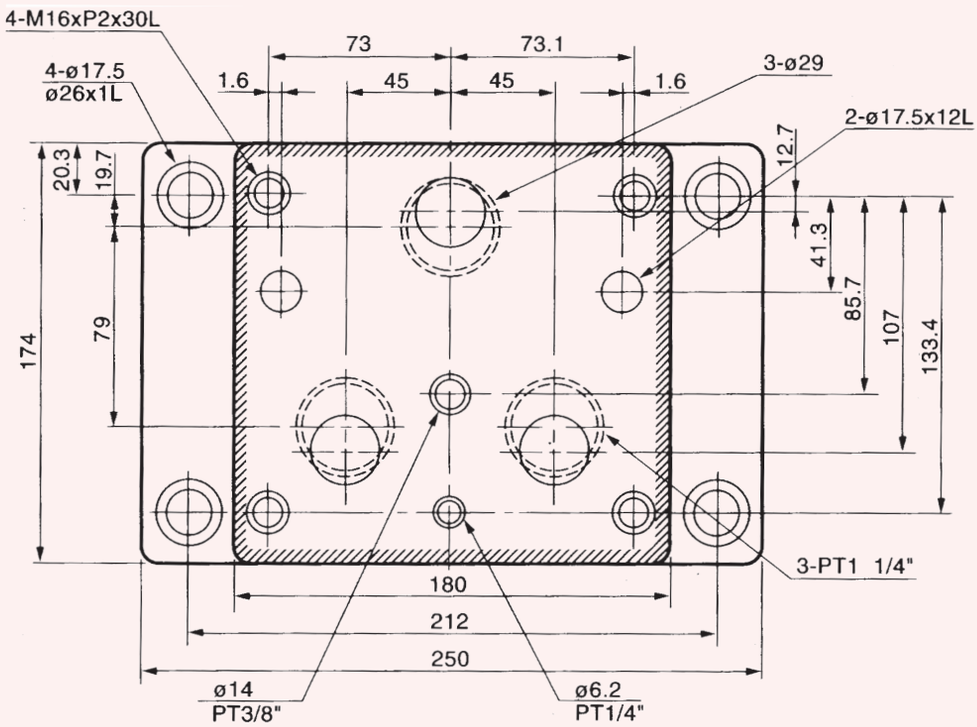

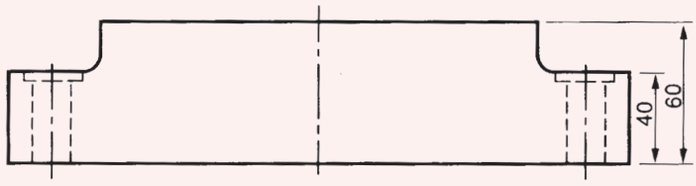

油壓電磁比例式壓力 & 流量複合閥
Proportional Electro- Hydraulic Relief And Flow Valves

入力電流 – 流量特性 / Input Current V.S. Flow

EFBG-06-250

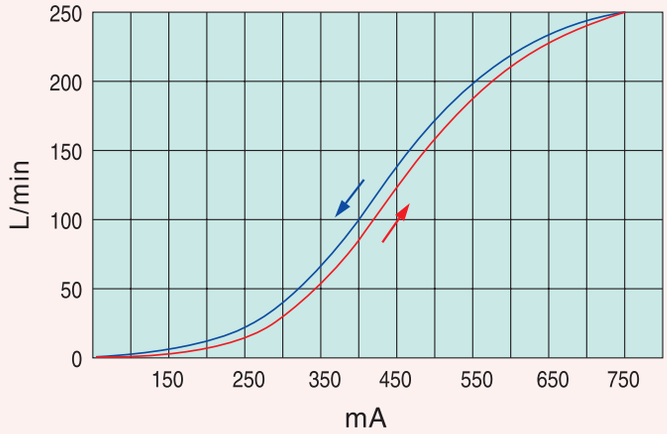

入力電流 – 壓力特性 / Input Current V.S. Pressure

EFBG-06 (C)

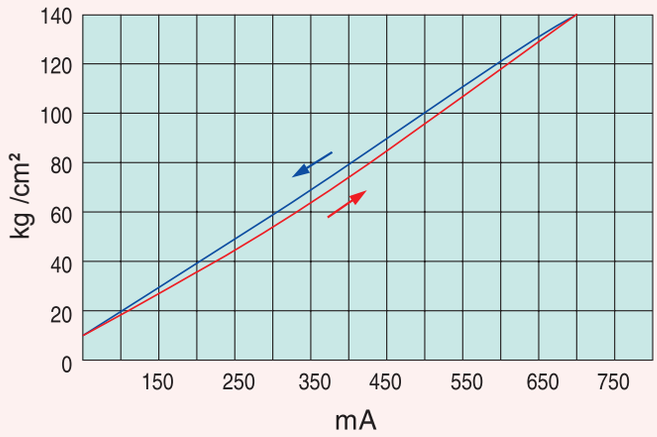

外部尺寸 (圖 A) / External Size Drawing (A) (mm)

EFBG - 06 - 250

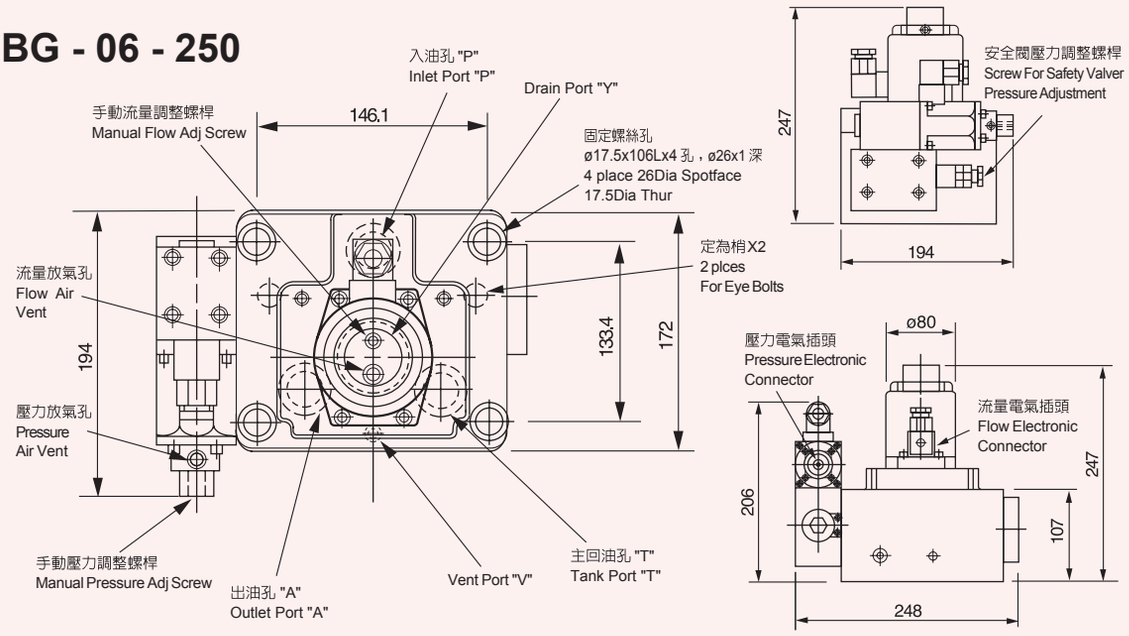

油壓電磁比例式壓力 & 流量複合閥
Proportional Electro- Hydraulic Relief And Flow Valves

EFBG - 10

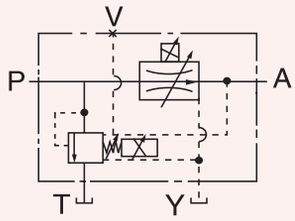

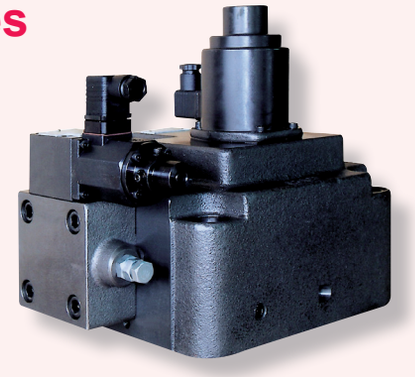

型號說明 Mode Description

EFBG - 10 - 500 - C - ※

1 2 3 4 5

1	油壓電磁比例式複合閥 **HNC Oil Pressure Electric Magnetic Proportional Compound Valve**
2	閥門口徑 **Valve Caliber**
3	最大通過流量 **Max. Flow Passed**
4	**C: 140 kg/cm^2** **H: 210 kg/cm^2**
5	設計號碼 **Design No.**

註 (1) 回油管盡量減少阻力，單獨使用一條管路直接插入油箱油面以下。
(2) 以上表列是配合本公司生產 HNC - 4075/HNC - 1085，標準電子控制器及 500 ℓ/min 油泵，單一閥門測試結果。
(1) The resistance in the return pipe should be reduced by using one piping seperately and insert directly inside the oil tank.
(2) The left chart is comply with our standard electronic controller HNC - 4075, HNC - 1085, standard electronic controller 500 ℓ/min, single valve test result.

使用說明注意事項 / Care in Application

安裝位置
放氣孔位置可自由調整，請將其方向朝上，以方便排出管路及閥門內的空氣。

回油管路
回油管路盡可能避免有限流現象，盡可能減少背壓。
手動調壓（壓力、流量）螺絲。
當電氣故障時，臨時應變使用，平時則復歸原位。

空氣排除
為達壓力穩定，速度切換靈敏，將管路及閥門內的空氣完全排出是相當重要的（參照 **EDG - 01**）。

最高安全壓力設定
請參照 **EBG - 06**

Place For Installation
The place of bleeder can be adjusted freely and put the direction upside available to eliminate the air in pipe passage and valve.

Drain
The return oil pipe passage should be avoided having flowed friction condition but reduce back pressure as possible.

Hand-adjusting (Pressure, Flow) Screw (bar)
When electric control is disorder and need to supply pressure occassionally, then just to turn the hand- adjusting pressure screw (bar) in clockwise direction. Restore it to the origin at usual time.

Elimination Of Air (Air Vent)
In order to stabilize the pressure and make speed shift actuely. it is very important to emilinate completely the air in pipe passage and valve. (refer to EDG - 1).

Highest Safety Pressure Set
Refer to EBG - 06

油壓電磁比例式壓力 & 流量複合閥
Proportional Electro- Hydraulic Relief And Flow Valves

規格 / Specification

	說明 Description		EDG - 03
最高使用壓力 Max. Operating Pressure		kg/cm²	210
流量系統 Flowing System	最大通過流量 Max. Flow	ℓ/min	125
	流量調整範圍 Flow Adjusting Range	ℓ/min	5 ～ 500
	閥門內部阻抗 (A-B) Valve Internal Resistance	kg/cm²	5
	定額電流 Rated Current	mA	750
	線圈阻抗 Coil Resistance	Ω	40
	磁滯 Magnetic Hysteresis	%	< 7
	再現性 Repeatability	%	< 1

規格 / Specification

	說明 Description		EDG - 03	
壓力系統 Pressure System	壓力調整範圍 Pressure Adjusting Range	kg/cm²	C	140
			H	210
	容許背壓 Allowable Back- Pressure	kg/cm²	註 (1)	
	定額電流 Rated Current	mA	C	750
			H	700
	線圈阻抗 Coil Resistance	Ω	10	
	磁滯 Magnetic Hysteresis	%	< 3	
	再現性 Repeatability	%	< 1	
	重量 Weight	kg	58	

底板圖 / Sub - Plates (mm)

EFBG - 10 - 500

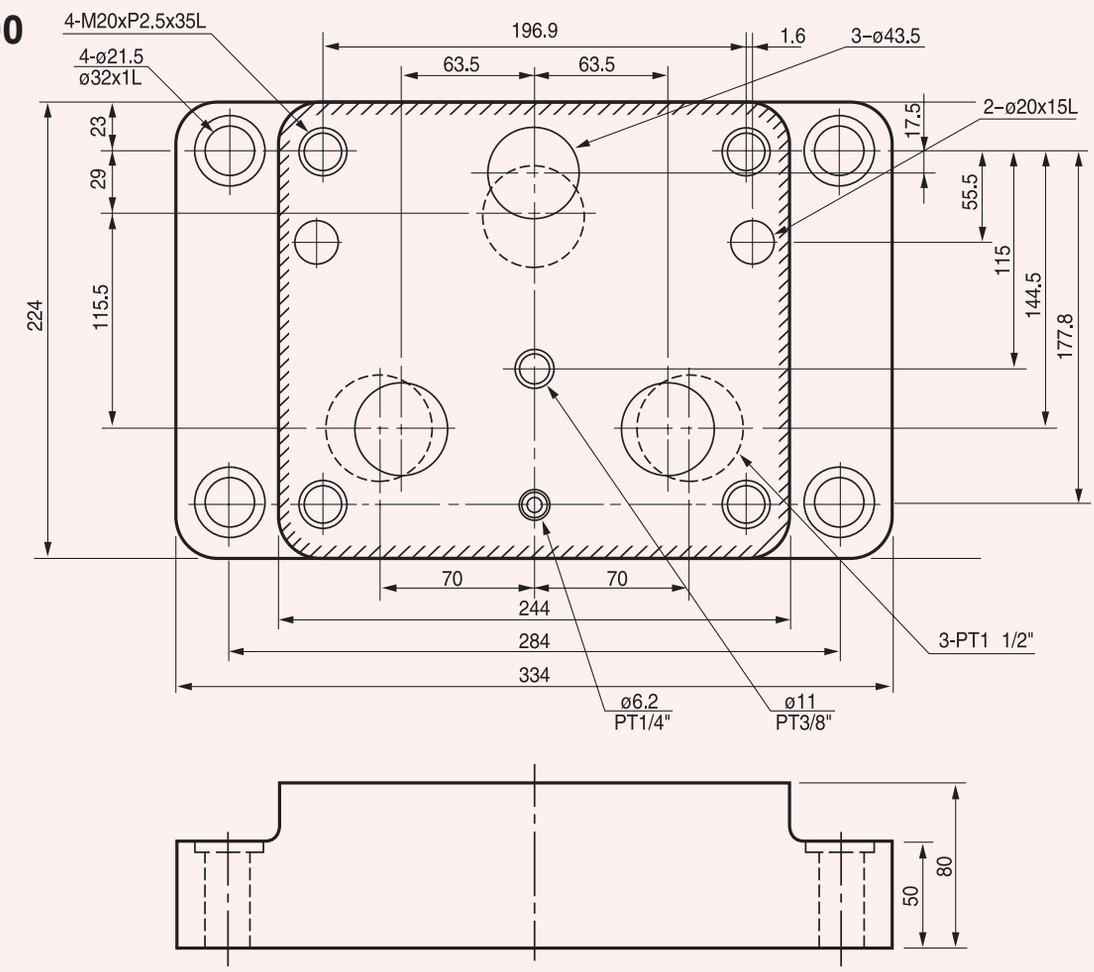

油壓電磁比例式壓力 & 流量複合閥
Proportional Electro- Hydraulic Relief And Flow Valves

入力電流 – 流量特性 / Input Current V.S. Flow

EFBG - 10 - 500

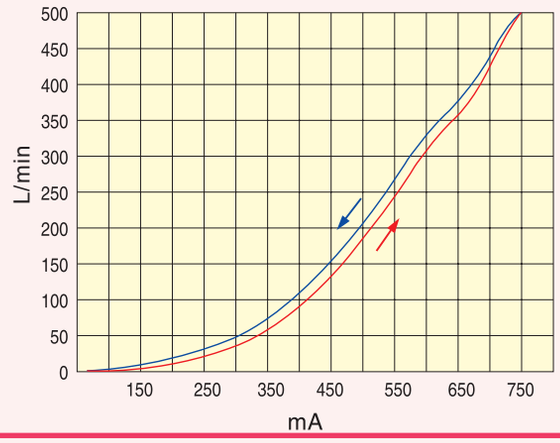

入力電流 – 壓力特性 / Input Current V.S. Pressure

EFBG - 10 (C)

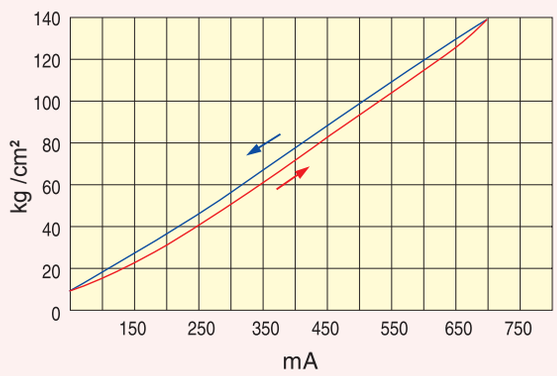

外部尺寸 (圖 A) / External Size Drawing (A) (mm)

EFBG - 10 - 500

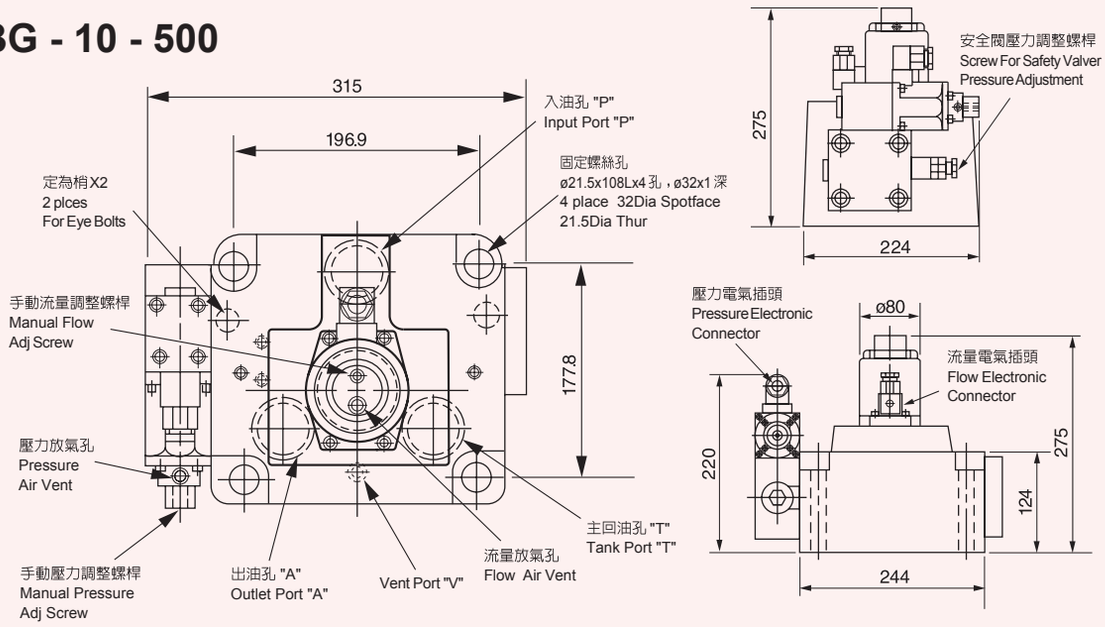

電子控制電路板
Electronic Amplifier P- C Board

- HNC - 1085 型號的電子控制電路板適用於負載阻抗 10 歐姆的比例式壓力控制閥
- HNC - 4075 型號的電子控制電路板適用於負載阻抗 40 歐姆的比例式流量控制閥

- Eectronic amplifier type HNC - 1085 is used for proportional pressure control valve.Load coil resistance 10 Ω
- Electronic amplifier type HNC - 4075 is used for proportional flow control valve. Load coil resistance 40 Ω

規格 / Specification

說明 Description	HNC - 1085	HNC - 4075
電源供應 **Supply Voltage**	AC 28 V±20%	AC 40 V±20%
保險絲 **Fuse**	2A	2A
負載阻抗 **Load Coil Resistance**	10Ω/20°C	40Ω/20°C
輸入控制電壓 **Input Control Voltage**	0 V~ +9 V	0 V~ +9 V
最大電流輸出範圍 **Max. Current Output Range**	0 ~ 850mA	0 ~ 750mA
基準電流調整範圍 **Pilot Current Adj. Range**	0 ~ 150mA	0 ~ 150mA
上升延時 **Up Ramp Time**	0.1~2.5 sec.	0.1~2.5 sec.
下降延時 **Down Ramp Time**	0.1~2.5 sec.	0.1~2.5 sec.
溫度誤差 **Temperature Drift**	0.1 mA/1°C	0.2 mA/1°C
工作溫度 **Work Temperature**	0~50 °C	0~50 °C
最大消耗電力 **Max. Power Requirement**	15 VA	40 VA

電路板連結器配線說明
Electronic Amplifier Terminal Connections

HNC - 1085 , HNC - 4075

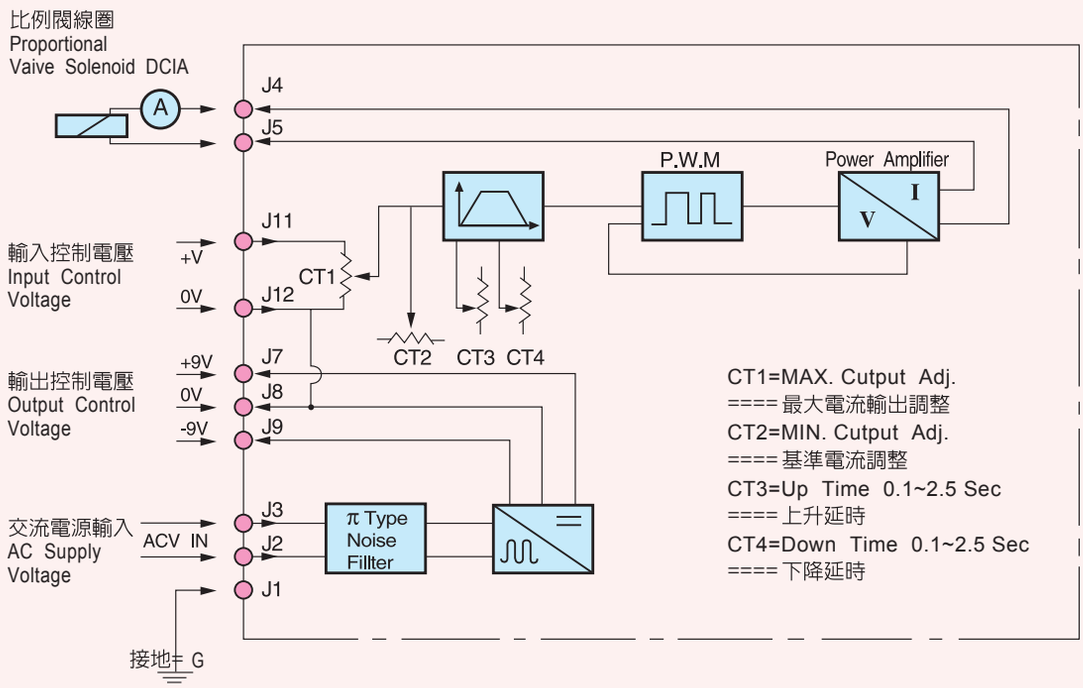

電路板尺寸 P - C Board Dimensions

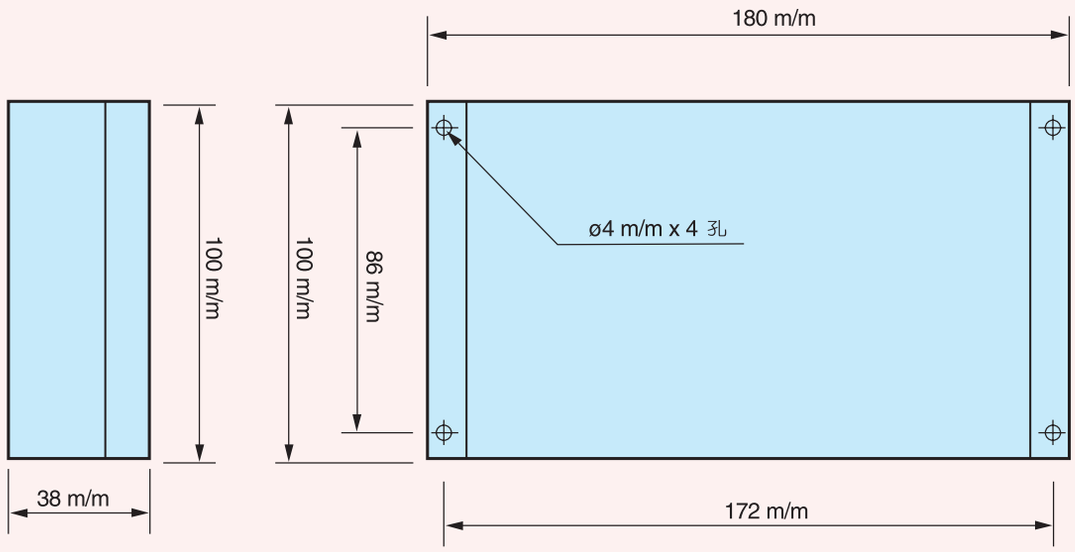

電路板連結器配線說明
Electronic Amplifier Terminal Connections

HNC - 1085 , HNC - 4075

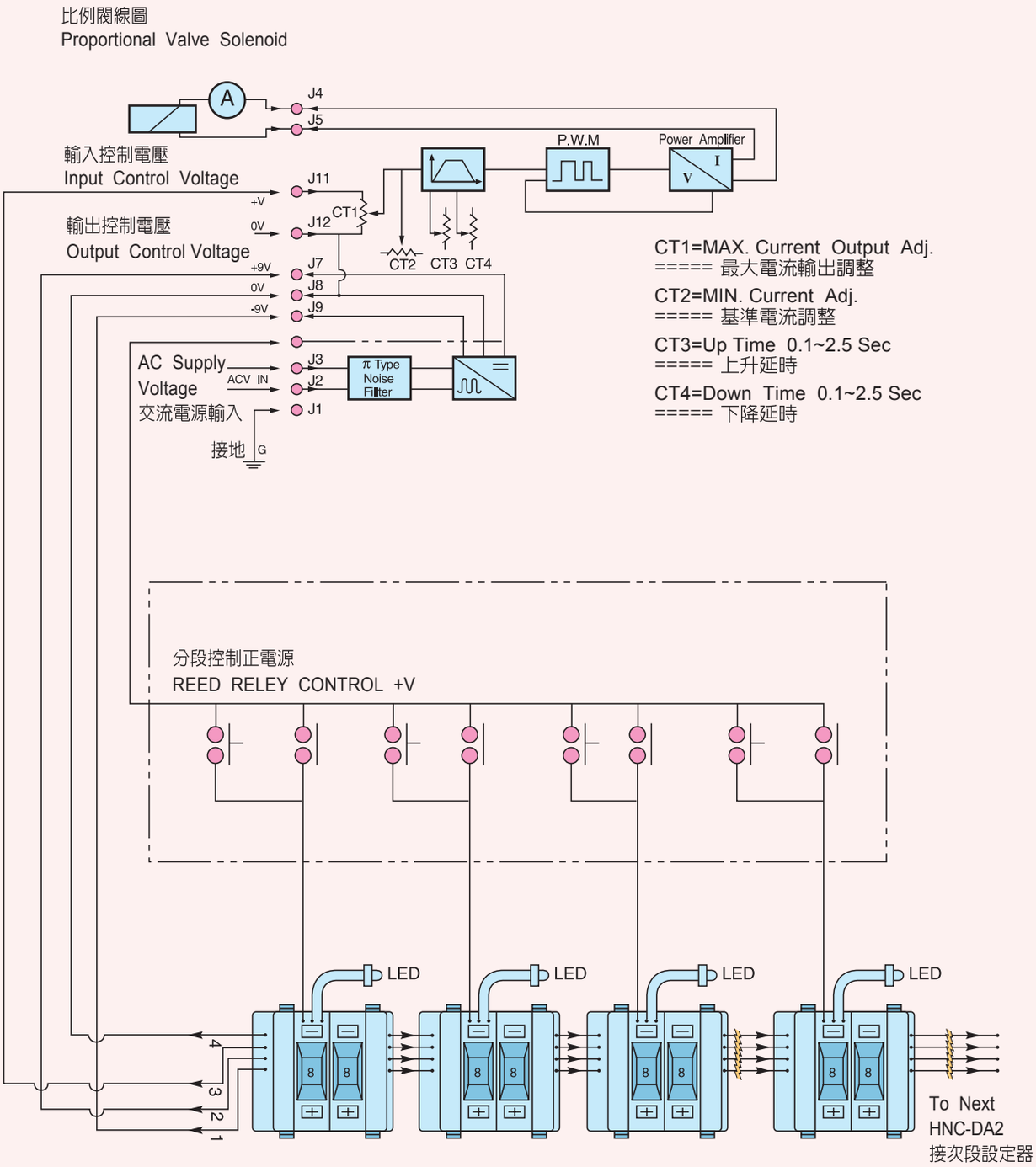

比例式電氣控制系統聯接圖

數字設定調整器尺寸
Digital Setting Adjuster Dimensions

HNC - DA2

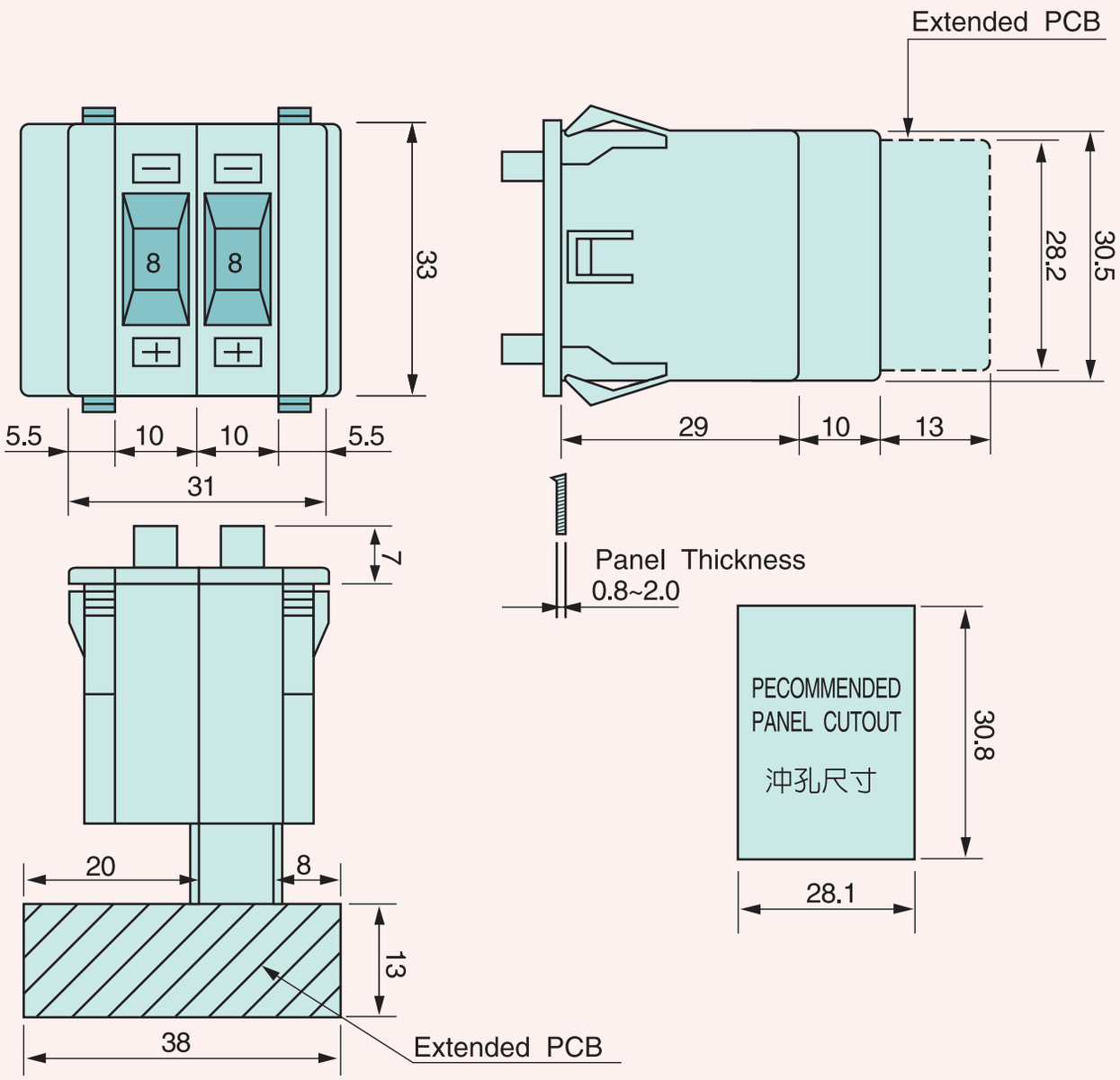

Units : mm
(1mm = 0.03937 in)

數字設定調整器尺寸
Digital Setting Adjuster Dimensions
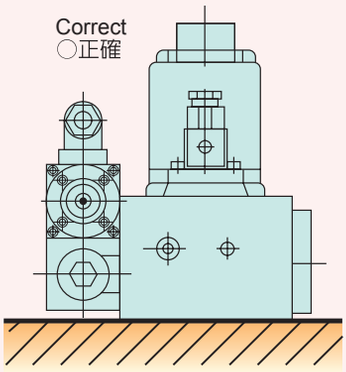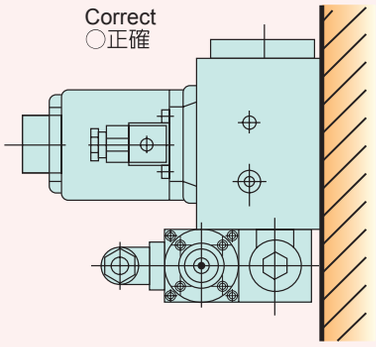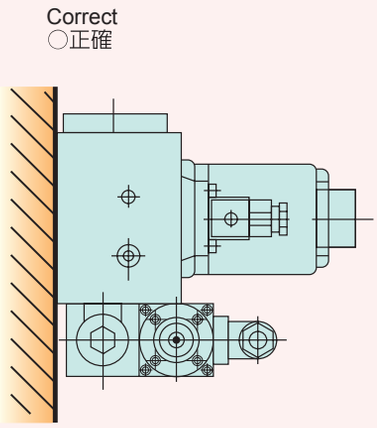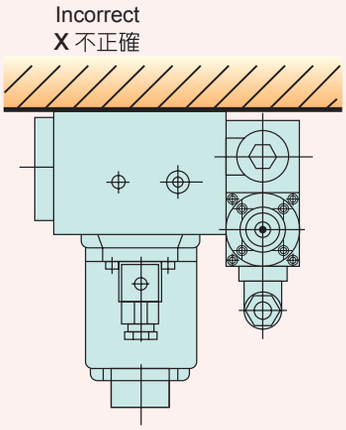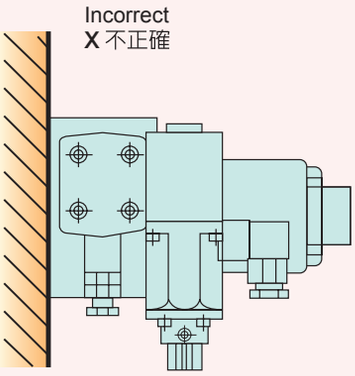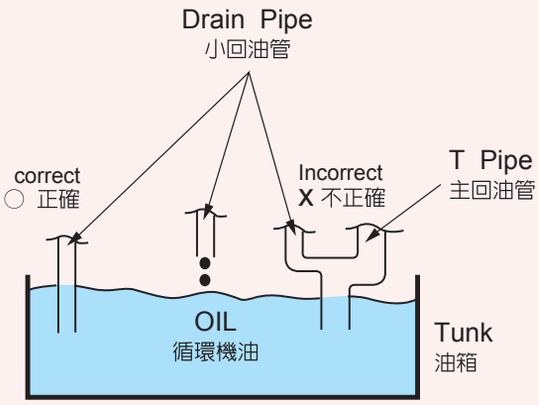
HNC - 1085 , HNC - 4075