OMAX

歐瑪斯油壓 HYDRAULICS

油 壓 專 用 馬 達
Hydraulic drive Motor
單 三 相 感 應 馬 達
Single & three phase induction motor

http://www.omax-hyd.com.tw/

OMAX 產品圖例 Products

HSW P7

油壓銑殼臥式馬達

Hydraulic drive motor horizontal type

HSL P13

油壓銑殼立式馬達

Hydraulic motor vertical type

HSL-L P13

油壓銑殼立式馬達(加長型)

Hydraulic motor vertical type (long front cover type)

BSW P5

標準型出軸臥式馬達

Low voltage horizontal motor

BSL P12

標準型出軸立式馬達

Low voltage vertical motor

HUM P12

油壓銑殼臥式出線盒在上馬達

Hydraulic drive motor horizontal

HTW P11

油壓鐵殼臥式馬達

Hydraulic drive motor steel horizontal type

HTL P11

油壓鐵殼立式馬達(無風蓋)

Hydraulic drive motor steel vertical type

HTL P11

油壓鐵殼立式馬達

Hydraulic drive motor steel vertical type

HDT P14

沉油式馬達

Submersible motor

HDT P14

沉油式馬達

Submerge oil motor

HAW P10

油壓鋁殼臥式馬達

Hydraulic horizontal motor aluminum housing

HSWG P9

油壓臥式長嘴型馬達

Hydraulic motor long coupling horizontal type

HSLG P10

油壓立式長嘴型馬達

Hydraulic motor long coupling vertical type

ROM P14

逆滲透幫浦馬達

Reverse osmosis pump drive motor

滿載電流表 Full Load Current Chart

unit:Amp

3 PHASE - 50Hz

HP	Pole	Kw	RPM	kg	200V	208V	220V	230V	240V	346V	380V	400V	415V	440V	460V	480V	575V	660V
1/4	4P	0.18	1420		1.87	1.80	1.7	1.63	1.56	1.08	0.98	0.94	0.9	0.85	0.81	0.78	0.65	0.57
1/2		0.37	1420	13	2.20	2.12	2.0	1.91	1.83	1.27	1.16	1.1	1.06	1.00	0.96	0.92	0.77	0.67
1		0.75	1420	16	4.0	3.8	3.6	3.4	3.3	2.3	2.1	2.0	1.9	1.8	1.7	1.65	1.4	1.2
2		1.5	1420	22	6.9	6.7	6.3	6.0	5.8	4.0	3.6	3.5	3.3	3.2	3.0	2.9	2.4	2.1
3		2.2	1430	30	10.2	9.8	9.3	8.9	8.5	5.9	5.4	5.1	4.9	4.7	4.4	4.3	3.6	3.1
5		3.7	1430	38	15.8	15.2	14.4	13.8	13.2	9.2	8.3	7.9	7.6	7.2	6.9	6.6	5.5	4.8
7.5		5.5	1440	65	24.0	23.1	21.8	20.9	20.0	13.9	12.6	12.0	11.6	10.9	10.4	10.0	8.3	7.3
10		7.5	1440	73	32.8	31.5	29.8	28.5	27.3	18.9	17.3	16.4	15.8	14.9	14.3	13.7	11.4	9.9
15		11	1440	120	46.6	44.8	42.4	40.6	38.9	27.0	24.5	23.3	22.5	21.2	20.3	19.4	16.2	14.1
20		15	1440	150	63.8	61.3	58.0	55.5	53.2	36.9	33.6	31.9	30.7	29.0	27.7	26.6	22.2	19.3
25		18.5	1440	180	78.1	75.1	71.0	67.9	65.1	45.1	41.1	39.1	37.6	35.5	34.0	32.5	27.2	23.7
30		22	1440	220	91.3	87.8	83.0	79.4	76.1	52.8	48.1	45.7	44.0	41.5	39.7	38.0	31.8	27.7
40		30	1440	240	123.2	118.5	112.0	107.1	102.7	71.2	64.8	61.6	59.4	56.0	53.6	51.3	42.9	37.3
1/4	6P	0.18	940	13	1.98	1.90	1.80	1.72	1.65	1.14	1.04	0.99	0.95	0.90	0.86	0.83	0.69	0.60
1/2		0.37	940	16	3.19	3.07	2.90	2.77	2.66	1.84	1.68	1.60	1.54	1.45	1.39	1.33	1.11	0.97
1		0.75	940	22	5.1	4.9	4.6	4.4	4.2	2.9	2.7	2.5	2.4	2.3	2.2	2.1	1.8	1.5
2		1.5	940	30	8.5	8.1	7.7	7.4	7.1	4.9	4.5	4.2	4.1	3.9	3.7	3.5	2.9	2.6
3		2.2	940	38	11.6	11.1	10.5	10.0	9.6	6.7	6.1	5.8	5.6	5.3	5.0	4.8	4.0	3.5
5		3.7	940	65	18.7	18.0	17.0	16.3	15.6	10.8	9.8	9.4	9.0	8.5	8.1	7.8	6.5	5.7
7.5		5.5	940	73	27.5	26.4	25.0	23.9	22.9	15.9	14.5	13.8	13.3	12.5	12.0	11.5	9.6	8.3
10		7.5	940	120	36.3	34.9	33.0	31.6	30.3	21.0	19.1	18.2	17.5	16.5	15.8	15.1	12.6	11.0
15		11	940	150	51.7	49.7	47.0	45.0	43.1	29.9	27.2	25.9	24.9	23.5	22.5	21.5	18.0	15.7
20		15	940	180	73.7	70.9	67.0	64.1	61.4	42.6	38.8	36.9	35.5	33.5	32.0	30.7	25.6	22.3
25		18.5	950	220	82.5	79.3	75.0	71.7	68.8	47.7	43.4	41.3	39.8	37.5	35.9	34.4	28.7	25.0
30		22	950	240	104.5	100.5	95.0	90.9	87.1	60.4	55.0	52.3	50.4	47.5	45.4	43.5	36.3	31.7

3 PHASE - 60Hz

HP	Pole	kW	RPM	kg	200V	208V	220V	230V	240V	346V	380V	400V	415V	440V	460V	480V	575V	660V
1/4	4P	0.18	1720		1.54	1.48	1.40	1.34	1.28	0.89	0.81	0.77	0.74	0.70	0.67	0.64	0.54	0.47
1/2		0.37	1720	13	1.87	1.80	1.70	1.63	1.56	1.08	0.98	0.94	0.90	0.85	0.81	0.78	0.65	0.57
1		0.75	1720	16	3.9	3.7	3.5	3.3	3.2	2.2	2.0	1.93	1.86	1.8	1.7	1.6	1.3	1.2
2		1.5	1720	22	6.3	6.0	5.7	5.5	5.2	3.6	3.3	3.1	3.0	2.9	2.7	2.6	2.2	1.9
3		2.2	1720	30	9.6	9.2	8.7	8.3	8.0	5.5	5.0	4.8	4.6	4.4	4.2	4.0	3.3	2.9
5		3.7	1740	38	15.3	14.7	13.9	13.3	12.7	8.8	8.0	7.6	7.4	7.0	6.6	6.4	5.3	4.6
7.5		5.5	1740	65	22.2	21.4	20.2	19.3	18.5	12.8	11.7	11.1	10.7	10.1	9.7	9.3	7.7	6.7
10		7.5	1740	73	30.1	29.0	27.4	26.2	25.1	17.4	15.9	15.1	14.5	13.7	13.1	12.6	10.5	9.1
15		11	1740	120	44.0	42.3	40.0	38.3	36.7	25.4	23.2	22.0	21.2	20.0	19.1	18.3	15.3	13.3
20		15	1740	150	58.3	56.1	53.0	50.7	48.6	33.7	30.7	29.2	28.1	26.5	25.3	24.3	20.3	17.7
25		18.5	1740	180	69.3	66.6	63.0	60.3	57.8	40.1	36.5	34.7	33.4	31.5	30.1	28.9	24.1	21.0
30		22	1740	220	80.3	77.2	73.0	69.8	66.9	46.4	42.3	40.2	38.7	36.5	34.9	33.5	27.9	24.3
40		30	1740	240	106.7	102.6	97.0	92.8	88.9	61.7	56.2	53.4	51.4	48.5	46.4	44.5	37.1	32.3
1/4	6P	0.18	1140	13	1.21	1.16	1.10	1.05	1.01	0.70	0.64	0.61	0.58	0.55	0.53	0.50	0.42	0.37
1/2		0.37	1140	16	2.42	2.33	2.20	2.10	2.02	1.40	1.27	1.21	1.17	1.10	1.05	1.01	0.84	0.73
1		0.75	1140	22	4.2	4.0	3.8	3.6	3.5	2.4	2.2	2.1	2.0	1.9	1.8	1.7	1.5	1.3
2		1.5	1140	30	7.7	7.4	7.0	6.7	6.4	4.5	4.1	3.9	3.7	3.5	3.3	3.2	2.7	2.3
3		2.2	1140	38	11.0	10.6	10.0	9.6	9.2	6.4	5.8	5.5	5.3	5.0	4.8	4.6	3.8	3.3
5		3.7	1160	65	16.5	15.9	15.0	14.3	13.8	9.5	8.7	8.3	8.0	7.5	7.2	6.9	5.7	5.0
7.5		5.5	1160	73	27.0	25.9	24.5	23.4	22.5	15.6	14.2	13.5	13.0	12.3	11.7	11.2	9.4	8.2
10		7.5	1160	120	31.9	30.7	29.0	27.7	26.6	18.4	16.8	16.0	15.4	14.5	13.9	13.3	11.1	9.7
15		11	1170	150	49.1	47.2	44.6	42.7	40.9	28.4	25.8	24.5	23.6	22.3	21.3	20.4	17.1	14.9
20		15	1170	180	66.0	63.5	60.0	57.4	55.0	38.2	34.7	33.0	31.8	30.0	28.7	27.5	23.0	20.0
25		18.5	1170	220	80.3	77.2	73.0	69.8	66.9	46.4	42.3	40.2	38.7	36.5	34.9	33.5	27.9	24.3
30		22	1170	240	106.7	102.6	97.0	92.8	88.9	61.7	56.2	53.4	51.4	48.5	46.4	44.5	37.1	32.3

OMAX 各型幫浦可生產馬達規格表 Motor spec for various type of pumps

specification																			
		3-Phase													Single-phase				
Type	6P	–	1/4	1/2	1	2	3	5	7 1/2	10	15	20	30						
	4P	1/4	1/2	1	2	3	5	7 1/2	10	15	20	30	40	40	1/4	1/2	1	2	3	5
Induction			LW	LW	LW	LW	LW	LW	LW	LW	LW	LW	LW	LW	LW	LW	LW	LW	LW	LW
NOP		W													LW					
PA			LW	LW	LW	LW	LW	LW	LW	LW						LW	LW	LW	LW	W
20L			LW		LW	LW	LW	LW								LW	LW	LW		
TFP			LW	LW	LW	LW	LW	LW												
1A			LW	LW	LW	LW	LW	LW								LW	LW	LW		
TOP			W	W	W	W										W	W	W		
五分			LW	LW	LW	LW	LW	LW	LW	LW						LW	LW	LW	LW	W
DS			W	LW	LW	LW	LW	LW	LW	LW						LW	LW	LW	LW	W
1P				LW	LW	LW	LW	LW	LW	LW							LW	LW	LW	W
FA1			W	LW	W	W	LW	LW	LW	LW	LW	W	W	W			LW	LW	LW	W
30L			W	W	LW	LW	LW	LW	LW	LW	LW	W	W	W		LW	LW	LW	LW	W
PB				LW	W	W	LW	LW	LW	LW	LW	W	W	W			LW	LW	LW	W
50T				W	LW	LW	LW	LW	LW	LW	LW	W	W	W		W	LW	LW	LW	W
PV2R2						LW	LW	LW	LW	LW	LW	W	W	W					LW	W
T6C						LW	LW	LW	LW	LW	LW	W	W	W					LW	W
VDC						LW	LW	LW	LW	LW	LW	W	W	W						
T6B						LW	LW	LW	LW	LW	LW	W	W	W					LW	W
150T							LW	LW	LW	LW	LW	W	W	W						
T6D								LW	LW	LW	LW	W	W	W						
VQ45										W	W	W	W	W						

Remarks:

1. 1/4HP~40HP
2. L＝Vertical type　W＝Horizontal type
3. Pole:2P/4P/6P/8P
4. Phase:3-phase/Single-phase

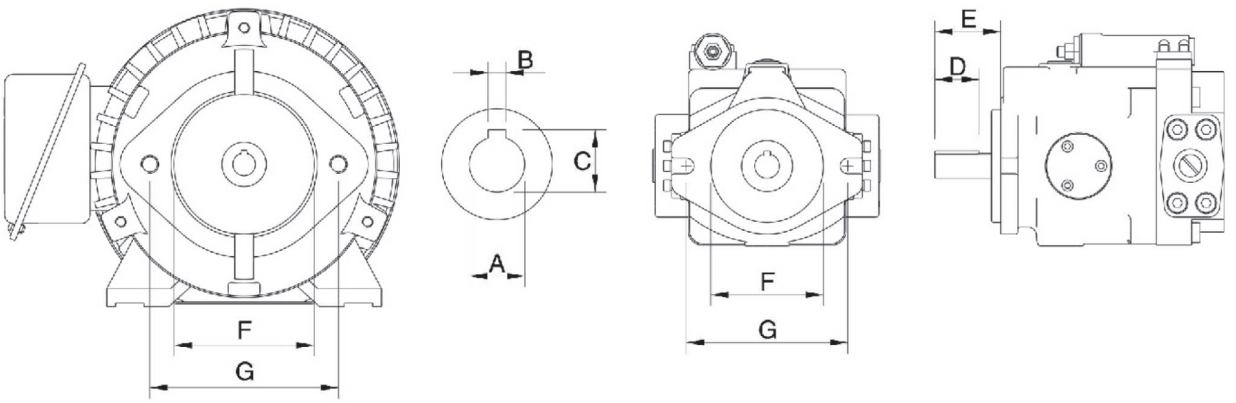

OMAX 各型幫浦尺寸規格表 Technical date

pump type	General pump model number	Axile Dimension AXB	Key Dimension C	D	E	I.D F	Span G	Install screw H
NOP	AM5,5A,NOP,TOP	Φ5x9			11	30	45	M6x1.0
20L	VP-F8/12/15/20/24,VA1	Φ12.7x3.175	14.2	19	36	Φ82.55	106	M10x1.5
	VCM–SF–12/20	Φ12.7x3.175	14.3	19.05	36.5	Φ82.55	106	M10x1.5
TFP	TFP	Φ12x3	13.6	25	40	Φ30	56x73	M6x1.0
1A	HGP-4B	Φ12x4	14	16	28.8	Φ30	□64x64	M6x1.0
TOP		Φ14x4	16	40	45	Φ47	68	M8x1.25
5分	VPD-F8/12/15/20	Φ15.875x4	17.7	19	36	Φ82.55	106	M10x1.5
	IG2F	Φ15.875x4	17.73	34	59	Φ82.55	106.4	M10x1.5
	GE4–26	Φ15.875x4	17.72	34	31.5	Φ82.55	106.36	M10x1.5
	(2B)3A,HP2	Φ15.875x4	17.6	18	31.8	Φ82.55	106.4	M10x1.5
DS	DS,FB1	Φ16x5	18.2	18.5	28	Φ70	98	M8x1.25
1P	1P	Φ17.46x5	19.6	40	50	Φ82.55	106.4	M10x1.5
GSP2		Φ18x6	20.5	45	55	Φ80	71.5x100偏下	M8x1.25
BCP	IG2E	Φ18x6	20.5	30	41	Φ82.55	106.4	M10x1.5
	DEG4–26	Φ18x6	20.5	28	50	Φ82.55	106.36	M10x1.5
GP2–85		Φ19.05x4.76	21.4	40	50	Φ70	95.3x31.8偏上	M8x1.25
P16	VCM–1M,PV2R1	Φ19.05x4.76	21.24	25	44.5	Φ82.55	106	M10x1.5
	VQ15	Φ19.05x4.76	21.24	27	53.5	Φ82.55	106	M10x1.5
	A16,A22,FA1	Φ19.05x4.76	21.25	22	46	Φ82.6	106.3	M10x1.5
30L	VCM-SF-30/40,VP-F25/30/40	Φ19.05x4.76	21.4	22	37	Φ95.02	□90x90	M10x1.5
	VD2	Φ19.05x4.76	21.4	22	37	Φ95.02	□90x90	M10x1.5
	50T(Φ19)	Φ19.05x4.76	21.4	25	50	Φ95	□90x90	M10x1.5
PB	PB	Φ20x5	22.5	32	40	Φ82.55	106	M10x1.5
	IG3E	Φ20x6	20.5	30	41	Φ101.6	146	M12x1.75
50T	VCM–50T	Φ22x5	24	28	50	Φ96	□90x90	M10x1.5
	50T	Φ22x5	24	28	55	Φ96	□90x90	M10x1.5
T6C	A37,PV2R2	Φ22.2x6.35	25.08	35	58.5	Φ101.6	146	M12x1.75
T6C	V23,V38	Φ22.23x6.35	25.08	35	58.5	Φ101.6	146	M12x1.75
	VQ25	Φ22.23x6.35	25.01	32	60.5	Φ101.6	146	M12x1.75
VDC	45A	Φ25.4x4.76	27.6	38	78	Φ135	□124	M12x1.75
PV2R2	PV2R2	Φ25.4x6.35	28.18	32	89	Φ101.6	146	M12x1.75
	PV2R2,VCM-12M	Φ25.4x6.35	28.18	40	67	Φ101.6	146	M12x1.75
	VCM-2M	Φ25.4x6.35	28.18	32	59	Φ101.6	146	M12x1.75
150T	150T四孔	Φ30x7	33	32	50.5	Φ160	187	M12x1.75
	150T六孔	Φ30x7	33	31.5	50.5	Φ160	187	M12x1.75
T6D	IG5F	Φ31.75x7.94	35.33	50	85	Φ127	181	M16x2.0
	VCM-3M,PV2R3,VCM-13M/23M	Φ31.75x7.94	35.32	40	75	Φ127	181	M16x2.0
	VQ35	Φ31.75x7.94	35.32	46	75	Φ127	181	M16x2.0
	V50/V70	Φ31.75x7.94	35.35	38	57	Φ127	181	M16x2.0
VQ45	VQ425	Φ38.1x9.525	42.36	50	85.7	Φ127	181	M16x2.0
	VQ45	Φ38.1x9.525	42.36	50	83	Φ127	181	M16x2.0
PV2R4	SVQ45	Φ38.1x9.525	42.36	50	83	Φ152.4	□228.6x228.6	M20x2.75
	SVQ435	Φ38.1x9.525	42.36	50	84	Φ152.4	□228.6x228.6	M20x2.75
PA	HGP-2A	Φ12.5x4	14	22	38	Φ50.8	□63.5x63.5	M8x1.25

OMAX 標準型出軸臥式馬達BSW Low voltage horizontal motors

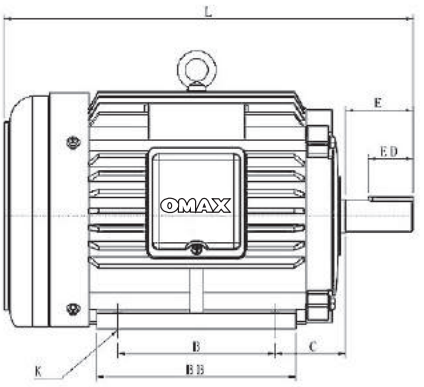

FIGURE1

4P	6P	Frame size	Phase	Drawings	A	AA	AB	AC	AD	B	BB
1/2	1/4	71	3	FIGURE1	112	40	150	166	132	90	116
1	1/2	80	3		125	37	158	178	138	100	132
2	1	90L	3		140	40	174	203	155	125	157
3	2	100L	3	FIGURE2	160	41	197	224	162	140	177
5	3	112M	3		190	46	228	234	168	140	177
7 1/2	5	132S	3		216	50	259	271	191	140	175
10	7 1/2	132M	3		216	50	250	271	191	178	213
15	10	160M	3		254	50	300	345	253	210	250
20	15	160L	3		254	50	300	345	253	254	300
25 | 30	20	180MC	3		279	75	356	389	305	241	300
40	25 | 30	180LC	3		279	80	356	389	305	279	335
1/2	–	80	1	FIGURE1	125	37	158	179	138	100	132
1	–	90L	1		155	40	192	198	155	125	145
2	–	90L	1		140	40	178	203	152	125	157
3	–	112M	1		190	48	226	235	175	140	178
5	–	112M	1		190	47	224	235	175	140	201

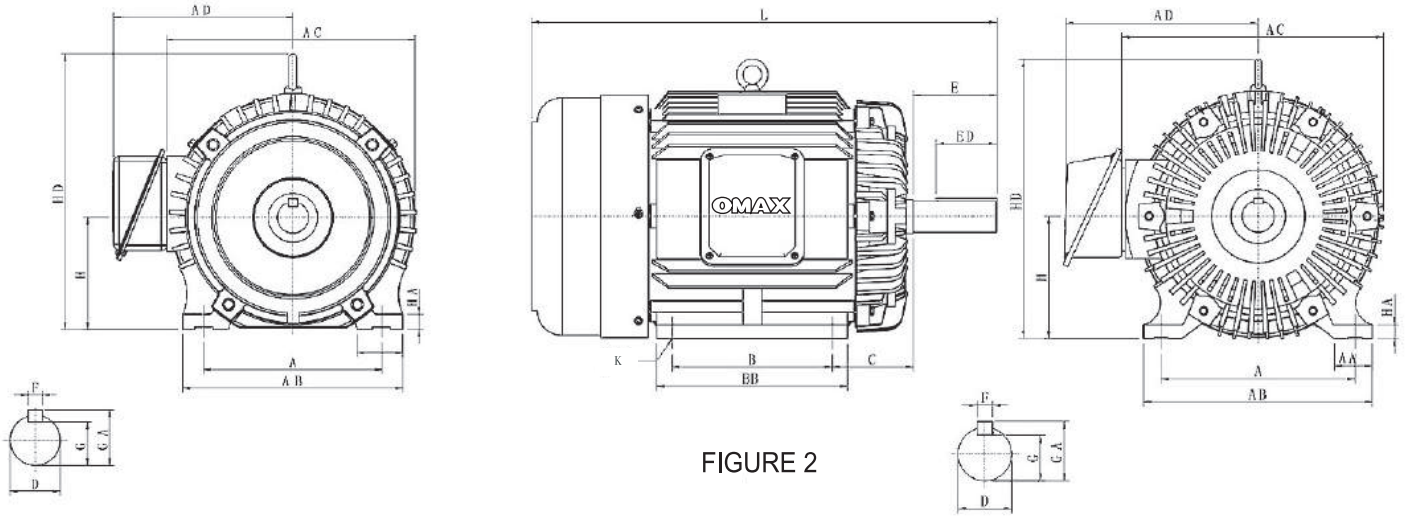

FIGURE 2

unit:mm

C	H	HA	HD	K	L	axile dimension						kg
						D	E	ED	F	G	GA	
45	71	10.5	155	10	255	14	40	25	5	11	16	13
50	80	11	170	10	280	19	40	30	6	15.5	21.5	15
56	90	11	190	12	320	24	50	40	8	20	27	22
63	100	13	250	12	363	28	60	40	8	24	31	31.5
70	112	13	265	12	370	28	60	40	8	24	31	38
89	132	14	310	12	438	38	80	60	10	33	41	59.5
89	132	14	310	12	475	38	80	60	10	33	41	69
108	160	18	370	15	612	42	110	80	12	37	45	112
108	160	18	370	15	655	42	110	80	12	37	45	125
121	180	20	421	15	670	48	110	80	14	42.5	51.5	180
121	180	20	421	15	715	55	110	80	16	49	59	238
53	80	11	175	10	290	16	30	25	5	13.5	18.5	15
45	90	11	190	12	315	22	50	40	7	18.5	25.5	24
61.5	90	11	190	12	352	24	50	40	8	20	27	27.5
75	112	12	265	12	398	28	60	40	8	24	31	42.5
90	112	13	265	12	428	28	60	40	8	24	31	47.5

OMAX 油壓銑殼臥式馬達HSW Hydraulic drive motor horizontal type

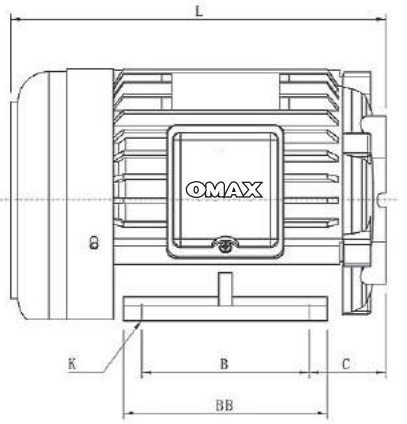

4P	6P	Frame	Phase	Drawings	A	AA	AB	AC	AD
1/2	1/4	80	3	FIGURE1	125	37	158	178	138
1	1/2	80	3		125	35	155	175	135
2	1	90L	3		140	40	172	196	145
3	2	I00L	3	FIGURE2	160	41	197	219	162
5	3	112M	3		190	45	228	235	165
7 1/2	5	132S	3		216	50	259	271	191
10	7 1/2	132M	3		216	50	250	271	191
15	10	160M	3		254	50	300	345	255
20	15	160L	3		254	50	300	345	255
25 30	20	180MC	3		279	75	356	389	305
40	25 30	180LC	3		279	80	356	389	305
1/2	–	80	1	FIGURE1	125	37	158	179	138
1	–	90L	1		140	40	175	203	157
2	–	90L	1		140	40	178	203	157
3	–	112M	1		190	48	226	235	175
5	–	112M	1		190	47	224	235	175

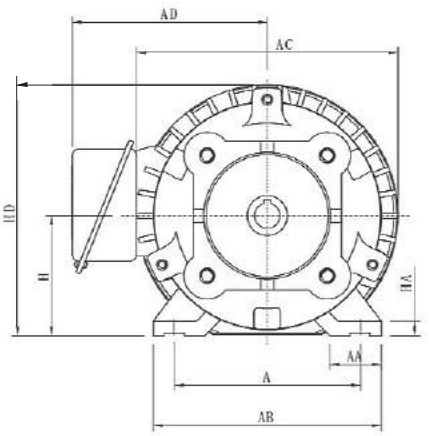

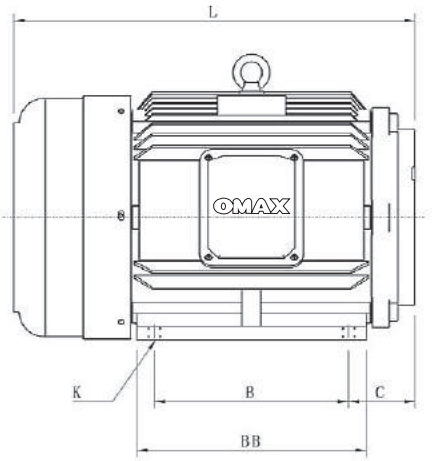

FIGURE1

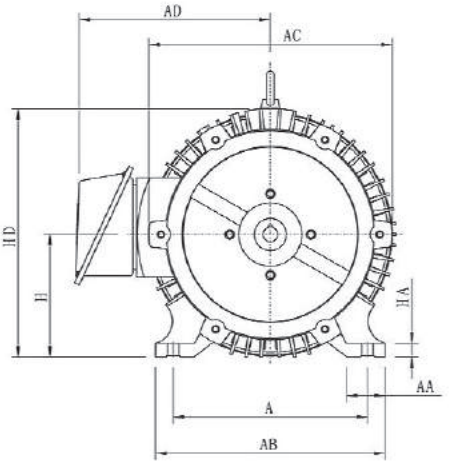

FIGURE2

unit:mm

B	BB	C	H	HA	HD	K	L	kg
100	130	53.5	80	10	175	10	233	13
100	130	53.5	80	10	170	10	240	15.5
125	156	52	90	10	190	12	272	23.5
140	177	65	100	13	210	12	305	31.5
140	172	57.5	112	12	230	12	300	38.5
140	175	77	132	14	266	12	345	60
178	213	75	132	14	266	12	380	70
210	250	86.5	160	18	325	15	480	115
254	300	86.5	160	18	325	15	525	140
241	300	104	180	20	370	15	550	180/220
279	330	104	180	20	370	15	585	240
100	132	61	80	11	173	10	267	15
125	157	60	90	11	190	12	292	24
125	157	67.5	90	11	190	12	307	28
140	178	80	112	12	226	12	343	42.5
140	201	95	112	13	226	12	373	48

OMAX 油壓臥式長嘴型馬達HSWG | Hydraulic motor long coupling horizontal type

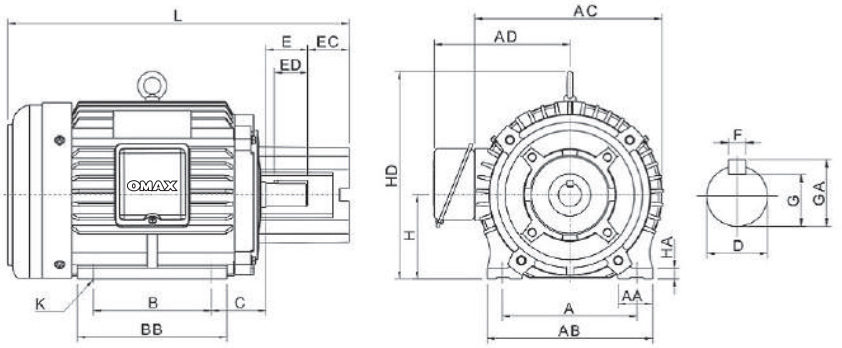

unit:mm

4P	6P	Frame	Phase	A	AA	AB	AC	AD	B	BB	C	H	HA	HD	K	L	Axile Dimension							kg
																	D	E	EC	ED	F	G	GA	
1	1/2	90S	3	125	35	155	175	135	100	130	45.5	80	10	170	10	300	19	30	41	30	6	15.5	21.5	14
32	1	90L	3	140	40	172	196	145	125	157	56	90	10	190	12	370	24	50	45	40	8	20	27	25
3	2	112S	3	190	47	227	235	169	140	175	50	112	12	265	12	370	28	44	48	40	8	24	31	35.5
5	3	112M	3	190	46	228	235	166	140	177	66	112	13	265	12	391	28	40	48	40	8	24	31	40
7.5	5	132S	3	216	50	259	271	191	140	175	74	132	14	310	12	455	38	52	62	50	10	33	41	65
10	7.5	132M	3	216	50	250	271	191	178	213	72	132	14	310	12	490	38	52	62	50	10	33	41	75
15	10	160M	3	254	50	300	345	256	210	250	101	160	18	375	15	625	42	60	72	55	12	37	45	125
20	15	160L	3	254	50	300	345	256	254	300	101	160	18	375	15	670	42	60	72	55	12	37	45	145
25 30		20	180M	3	279	80	355	389	290	241	297	131	180	20	417	14.5	728	48	70	90	50	14	42.5	51.5	185/230
40	25 30		180L	3	279	80	355	389	290	279	335	131	180	20	417	14.5	766	55	70	90	50	16	49	59	255

OMAX 長嘴型馬達型安裝實體圖HSWG | Assembly drawing

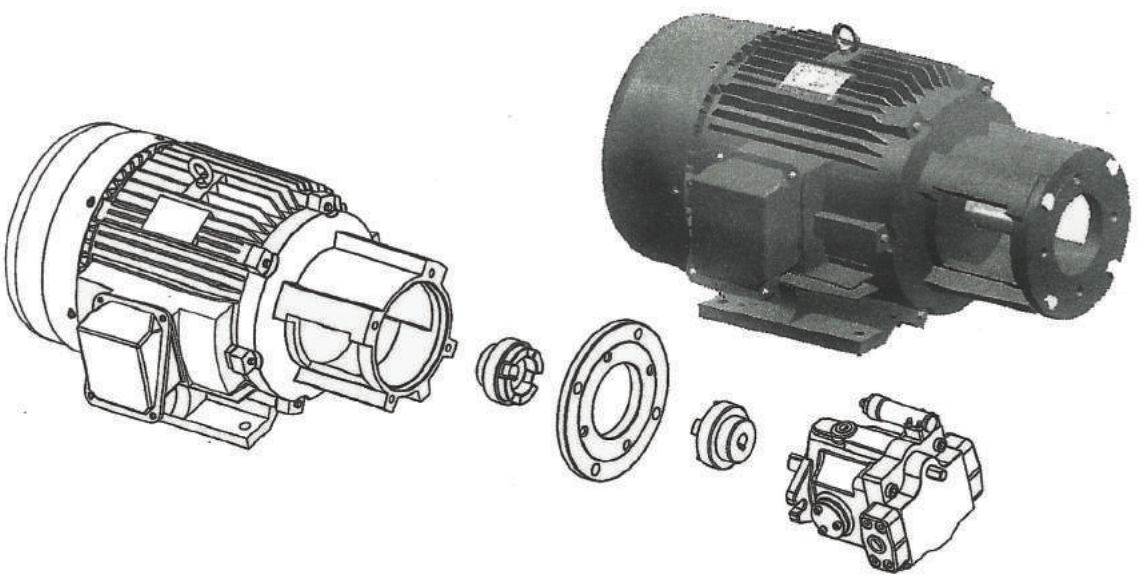

OMAX 油壓立式長嘴型馬達HSLG | Hydraulic motor long coupling vertical type

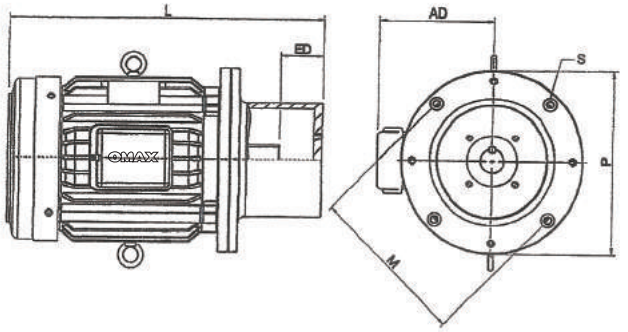

FIGURE1

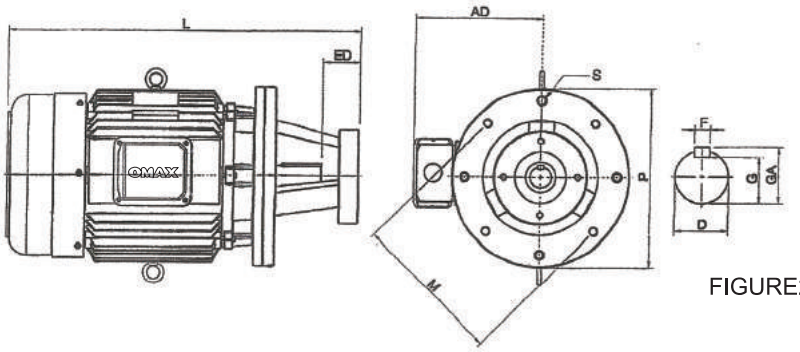

FIGURE2

unit:mm

4P	4P	Phase	Drawings	AD	M	P	S	L	axile dimension					kg
									D	ED	F	G	GA	
7.5	5	3	FIGURE	195	265	300	15	491	38	72	10	33	41	75
10	7.5	3		191	265	300	15	525	38	72	10	33	41	85
15	10	3	FIGURE	250	300	350	19	689	42	78	12	37	45	140
20	15	3		250	300	350	19	733	42	78	12	37	45	165

OMAX 油壓鋁殼臥式馬達HAW | Hydraulic horizontal motor aluminum housing

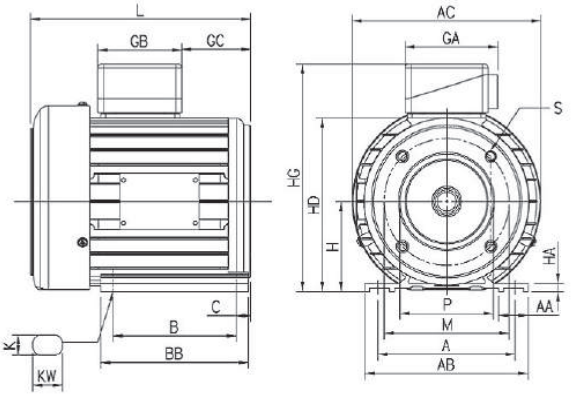

unit:mm

4P	6P	Phase	A	AA	AB	AC	B	BB	C	GA	GB	GC	H	HA	HD	HG	K	KW	L	kg
1	1/2	3	140	30	166	192	100	125	15	95	85	41	90	8	174	225	10	15	194	13
2	1	3	140	30	166	192	125	150	15	95	85	71	90	8	174	225	10	15	224	18
3	2	3	140	30	166	192	125	150	15	95	85	101	90	8	174	225	10	15	254	20.5

OMAX 油壓鐵殼臥式馬達HTW Hydraulic drive motor steel horizontal type

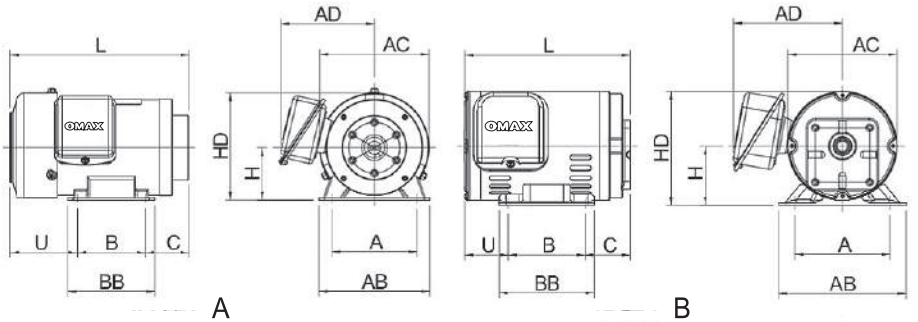

unit:mm

4P	6P	Phase	Drawings	pump	Fram size	A	AB	AC	AD	B	BB	C	H	HD	K	KW	L	U	kg
1/4HP	4P	3	A	TK/NOP	110	100	130	Φ129	110	80	102	51.5	62	126.5	8	20	207	75.5	7.5
1/4HP	4P	3	A	05A/AP/100	125	112	150	Φ142	128	90	112	30	70	141	9	25	192	72.5	7.5
1/2HP	4P	3	A	1A/PA	125	112	150	Φ142	128	90	112	53.5	70	141	9	25	216	72.5	10
1/2HP	4P	3	B	1A/PA	125	112	150	Φ129	128	90	112	53.5	70	134	9	25	180	36.5	9.5
1/2HP	4P	3	A	05A/AP/100	125	112	150	Φ142	128	90	112	30	70	141	9	25	193	72.5	10
1HP	4P	3	A	1A/PA	125	112	150	Φ142	128	90	112	53.5	70	141	9	25	231	87.5	10
1HP	4P	3	B	1A/PA	125	112	150	Φ129	128	90	112	53.5	70	134	9	25	196	52	9.5
1HP	4P	3	A	05A/AP/100	125	112	150	Φ142	128	90	112	30.5	70	141	9	25	208	87.5	10
1HP	4P	3	A	1A/PA	140	125	156	Φ156	133	75	94	64.5	77	155	9	25	239	99.5	10
2HP	4P	3	A	1A/PA	160	140	180	Φ177	143	100	130	69.5	89	178	10	25	277.5	108	17
1/2HP	4P	1	A	1A/PA	140	125	156	Φ156	131	75	94	64.5	77	155	9	25	242	102	11
1HP	4P	1	A	1A/PA	160	140	180	Φ177	149	100	130	69.5	89	178	10	25	277.5	108	19
2HP	4P	1	A	1A/PA	160	140	180	Φ177	149	100	130	79.5	89	178	10	25	297.5	118	23

OMAX 油壓鐵殼立式馬達HTL Hydraulic drive motor steel vertical type

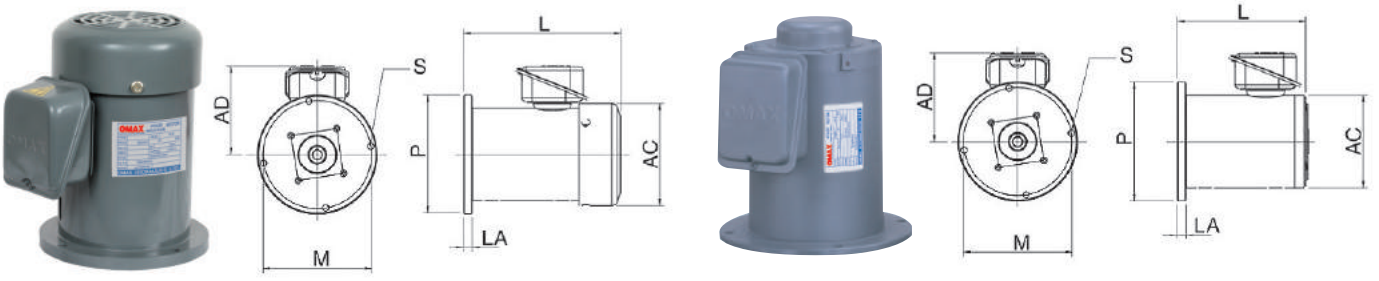

unit:mm

HP	Poles	Phase	Drawings	pump	Frame size	AC	AD	L	LA	M	N	P	S	T	kg
1HP	4P	3	A	1A/PA	125	142	123	220	12	Φ150	—	165	Φ8.5	—	10
1HP	4P	3	B	1A/PA/TFP/HP1	125	129	123	184	12	Φ150	—	165	Φ8.5	—	9.5
2HP	4P	3	B	1A/PA	160	164	139	245	9	Φ212	180	235.5	Φ11	12	16.5
1HP	4P	1	A	1A/PA	160	177	144	270	9	Φ212	180	235.5	Φ11	12	19
1HP	4P	1	B	1A/PA	160	164	144	250	9	Φ212	180	235.5	Φ11	12	18.5
2HP	4P	1	A	1A/PA	160	177	144	290	9	Φ212	180	235.5	Φ11	12	23
2HP	4P	1	B	1A/PA	160	164	144	265	9	Φ212	180	235.5	Φ11	12	22.5

OMAX 標準型出軸臥式馬達BSL Low voltage vertical motors

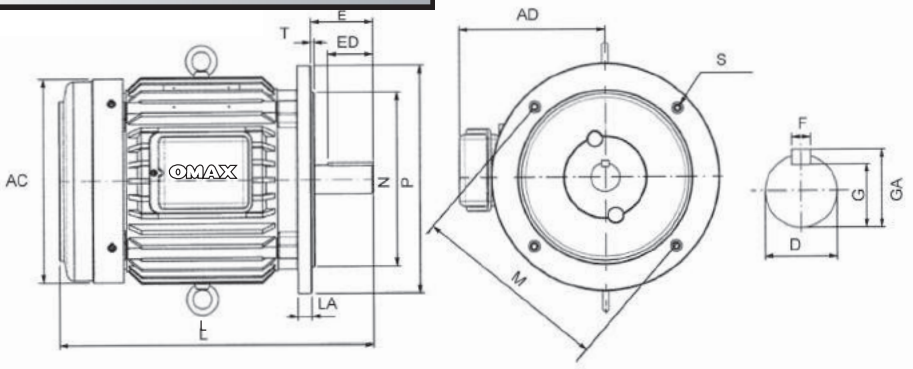

unit:mm

4P	6P	Frame size	Phase	AC	AD	L	LA	M	N	P	S	T	axile dimension D	E	ED	F	G	GA	kg
1/2X2		71	3	158	130	260	11.5	130	110	160	10	3.5	14	30	25	5	11	16	11.5
1/2	1/4	71	3	158	130	275	11.5	130	110	160	10	3.5	14	30	25	5	11	16	12.3
1	1/2	80	3	177	135	278	11.5	165	130	200	12	3.5	19	40	30	6	15.5	21.5	18
2	1	90	3	196	150	338	11.5	165	130	200	12	3.5	24	50	40	8	20	27	23
3	2	100	3	220	156	365	14.5	215	180	248	15	4	28	60	40	8	24	31	23
5	3	112	3	228	163	380	13	215	180	250	15	5	28	60	40	8	24	31	40
7.5	5	132	3	268	193	420	16	265	230	300	15	4	38	80	60	10	33	41	58
10	7.5	132	3	268	193	455	16	265	230	300	15	4	38	80	60	10	33	41	70
15	10	160M	3	318	250	612	19	300	250	350	19.5	5	42	110	80	12	37	45	125
20	15	160L	3	318	250	656	19	300	250	350	19.5	5	42	110	80	12	37	45	135
1/2		80	1	177	139	310	11	130	110	160	12	3.5	14	30	30	5	11.5	16.5	17
1		90	1	196	152	358	9	165	130	200	12	3.5	24	50	40	8	20	27	23
2		90	1	196	156	390	9	165	130	200	12	3.5	24	50	40	8	20	27	30
3		112	1	228	174	423	13	215	180	250	15	5	28	60	40	8	24	31	42.5

OMAX 油壓銑殼臥式出線盒在上馬達HUM Hydraulic drive motor horizonal

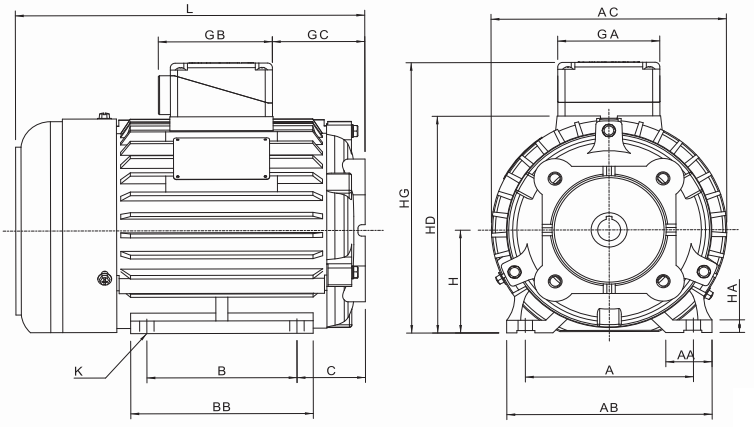

unit:mm

4P	6P	Frame size	Phase	A	AA	AB	AC	B	BB	C	GA	GB	GC	H	HA	HD	HG	K	L	kg
1		80	3	125	35	155	175	100	130	53.5	88	100	54	80	10	168	220	10	240	15
2	1	90L	3	140	38.5	171	196	125	152	57	85	95	77	90	11	190	241	12	280	23
3	2	100L	3	160	45	197	219	140	177	65	85	95	92.5	100	13.5	213	262	12	305	32
5	3	1/2M	3	190	46	232	235	140	169	57.5	100	110	75	112	15	230	280	12	300	42

OMAX 油壓銑殼立式馬達HSL Hydraulic motor vertical type

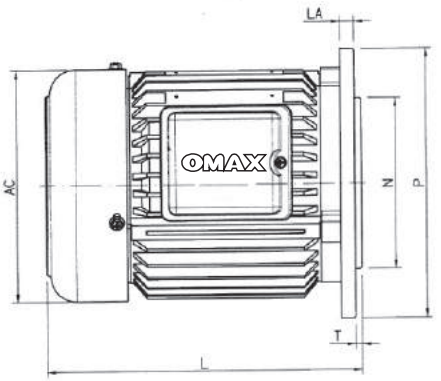

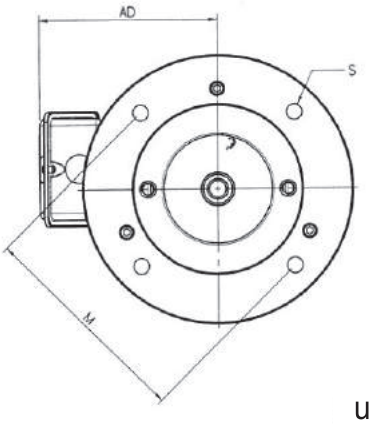

unit:mm

4P	6P	Frame size	Phase	AC	AD	L	LA	M	N	P	S	T	kg
1	1/2	80	3	177	140	250	10	180	130	206	12	12	16.5
1	–	90	1	196	155	282	10	200	130	230	12	10	24
2	1	90	3	196	150	264	10	200	130	230	12	10	24
2	–	90	1	196	160	325	10	200	130	230	12	10	30
3	2	112	3	228	166	290	12	225	180	250	12.5	14	32
3	-	112	1	228	175	332	14	225	180	255	12.5	14	42.5
5	-	112	3	228	166	287	12	225	180	255	12.5	14	37
7.5	5	132	3	268	195	348	14	265	230	300	15	5	61
10	7.5	132	3	268	195	380	14	265	230	300	15	5	71

OMAX 油壓銑殼立式馬達(加長型)HSL-L Hydraulic motor vertical type (long front cover type)

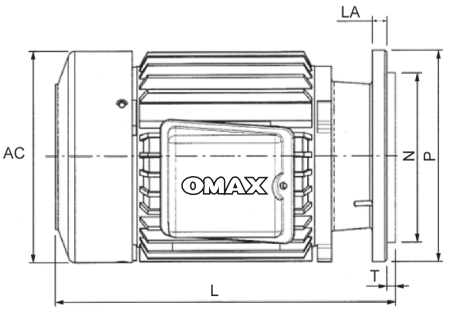

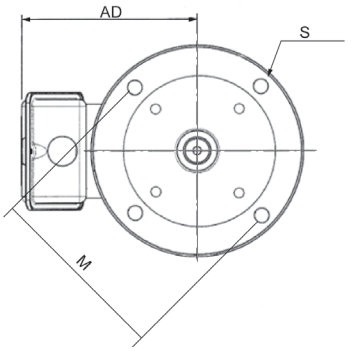

unit:mm

4P	6P	Frame size	Phase	AC	AD	L	LA	M	N	P	S	T	kg
1/2	1/4	71	3	158	130	250	11	130	110	160	11	–	12.5
15	10	160	3	318	255	508	18	300	250	350	19	6	106
20	15	160	3	318	252	553	18	300	250	350	19	6	130

OMAX 逆滲透幫浦馬達ROM Reverse osmosis pump drive motor

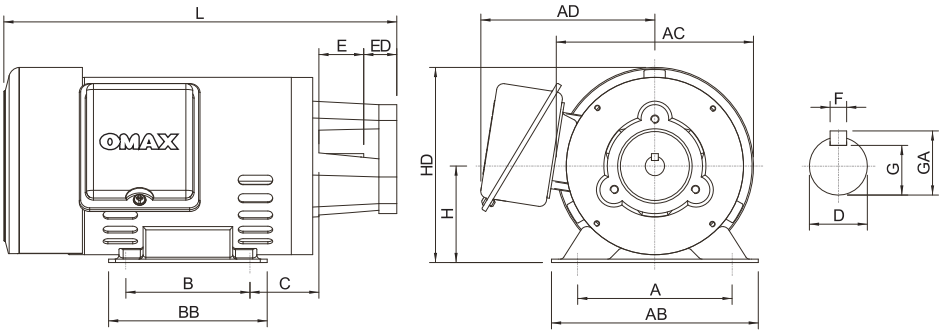

unit:mm

4P	Phase	A	AB	AC	AD	B	BB	C	H	HD	L	axile dimension						kg
												D	E	ED	F	G	GA	
1/2	1	112	150	142	130	90	112	49.5	70	150	282							10
1	1	140	180	177	150	100	130	69.5	89	178	347	19	23	41	6	15.5	21.5	19

OMAX 沉油式馬達HDT Submerge oil motor

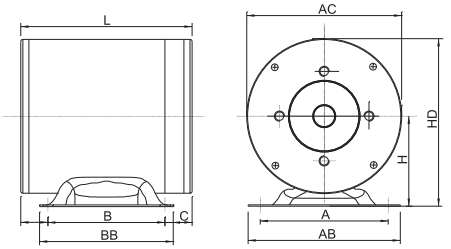

FIGURE1

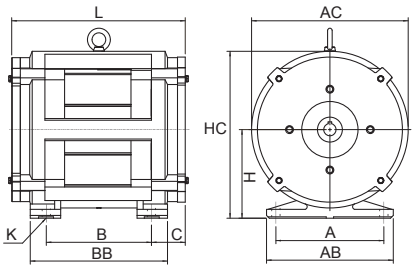

FIGURE2

unit:mm

4P	6P	Phase	Drawings	A	AB	AC	B	BB	C	H	HD	K	KW	L	kg
1		3	FIGURE1	140	180	164	100	130	42.5	89	171	10	25	219	15
2	1	3	FIGURE1	140	180	164	100	130	42.5	89	171	10	25	219	18
3	2	3	FIGURE1	190	226	185	140	168	32. 5	108	201	12	25	205	20
5	3	3	FIGURE1	190	226	185	140	168	32. 5	108	201	12	25	205	22
7. 5	5	3	FIGURE1	190	226	185	140	168	52. 5	108	201	12	25	245	27
10	7. 5	3	FIGURE1	190	226	185	140	168	62. 5	108	201	12	25	265	33
15	10	3	FIGURE2	195	230	285	190	245	60	160	302	15		313	62. 5
20	15	3	FIGURE2	195	230	285	190	245	60	160	302	15		313	67. 5

OMAX 馬達特性表 Technical Data

- Test condifion:220V/60Hz/4P/3ϕ
- Size meets CNS 3071/C1036
- Characteristic meets IEC34-1/EN60034/CNS2934

Output		Speed	Frame size	Insulation Class	Full Load Characteristic				Start Characteristic		Largest Torgue kg/cm
HP	Kw	rpm/min			轉矩 Kg-cm	效率 %	功率因數 %	電流 Amp	轉矩比% Torque	電流 Amp	
1	0.75	1720	80	E	42	81.3	71.5	3.4	2.2	15.5	139
2	1.5	1720	90L	E	84	83.0	79.0	6.1	2.2	31.5	245
3	2.2	1720	100L	E	126	85.5	78.5	8.7	2.0	50.5	334
5	3.7	1740	112M	E	210	85.5	81.5	13.5	1.8	82.0	540
71/2	5.5	1740	132S	B	315	86.5	81.5	20.1	1.9	125	810
10	7.5	1740	132M	B	420	87.0	80.5	25.1	2.0	189	1037
15	11	1740	160M	B	630	86.0	82.5	36.7	1.6	289	1562
20	15	1740	160L	B	840	88.5	80.0	50.3	1.7	351	1975
25	18.5	1740	180M	B	1050	89.0	83.5	63	2.0	430	2369
30	22	1740	180M	B	1260	89.0	85.5	73	1.7	539	2825
40	30	1740	180L	F	1680	92	88.0	97	1.5	612	3779

OMAX 零件明細表 Parts List

項目 Part NO	零件名稱 Description	項目 Part NO	零件名稱 Description	項目 Part NO	零件名稱 Description
No.1	前托架 Bracket-L	No.11	風罩 Fan cover	No.21	六角螺絲 Socket head screws
No.2	框架 Frame	No.12	出線皮 Out line rind	No.22	螺絲墊圈 Screw washer
No.3	後托架 Bracket-F	No.13	出線盒下蓋 Out line box lower cover	No.23	六角螺絲 Socket head screws
No.4	前軸承 Bearing-L	No.14	電線保護器 Bushing head	No.24	十字螺絲 Cross screw
No.5	心軸 Shaft	No.15	接線板 Patch board	No.25	螺絲 Screws
No.6	轉子 Rotor	No.16	接線板護蓋 Patch board cover	No.26	螺帽 Screw nut
No.7	定子 Stator	No.17	出線盒邊條 Out line box side article	No.27	螺絲 Screws
No.8	後軸承 Bearing-F	No.18	出線盒上蓋 Out line box upper cover		
No.9	壓簧 Pre-load spring	No.19	吊環 Flying rings		
No.10	風扇 Fan	No.20	銘牌 Name plate		

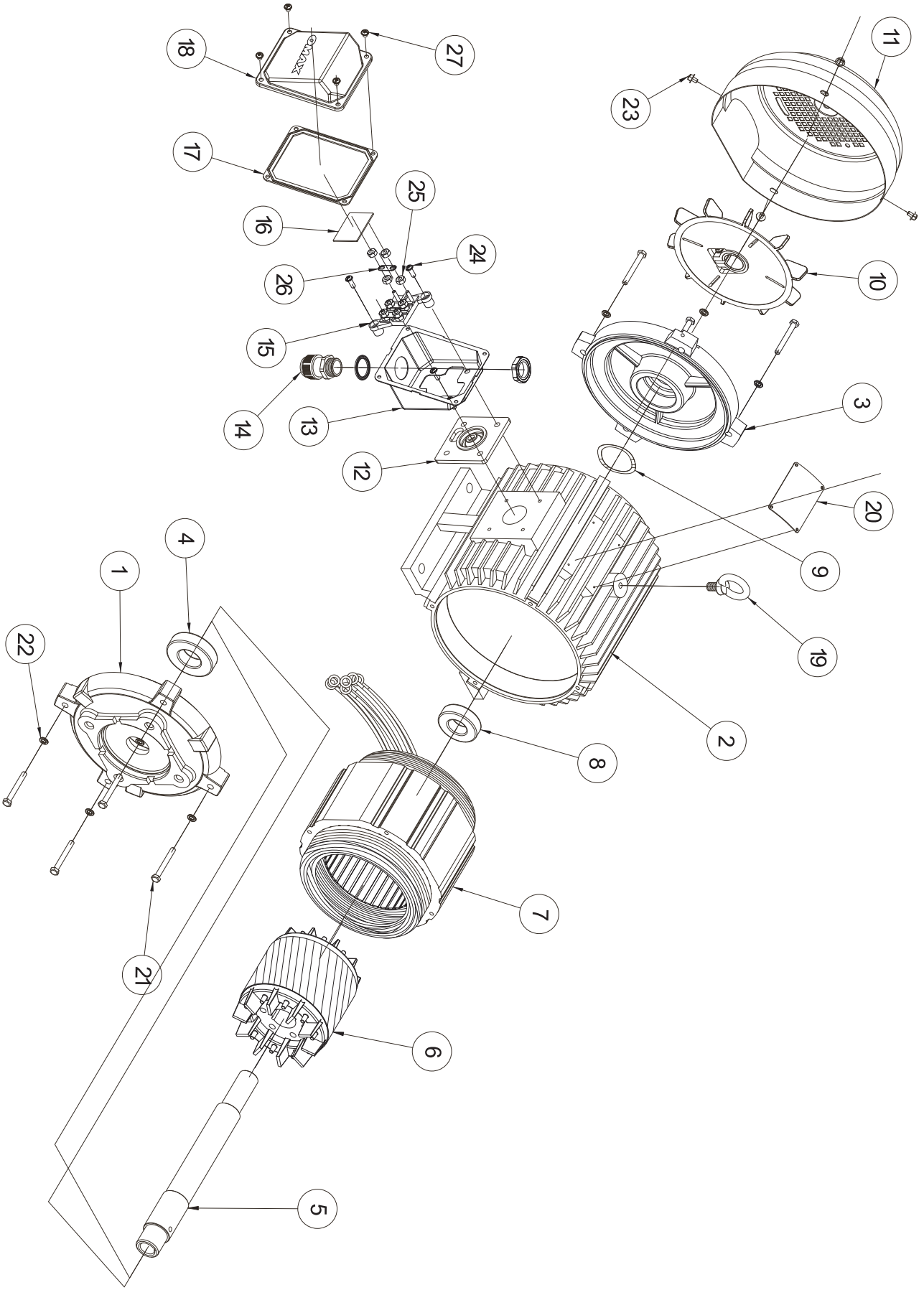
11
23
10
3
20
9
19
2
8
7
6
5
21
22
1
4
12
13
14
15
26
24
25
16
17
18
27

OMAX 世界主要國家電壓周率表

Country		Hz	Voltage	
			single phase	3-phase
阿富汗	Afghanistan	50	220	220/380
阿爾及利亞	Algeria	50	127/220	220/380
阿根廷	Argentina	50	220	220/380
澳洲	Australia	50	240	240/415
奧地利	Austria	50	220	220/380
巴哈馬	Bahamas	60	120	120/208
比利時	Belgium	50	127/220	220/380
巴西	Bruzil	50	110/220	220/380
		60	127	
緬甸	Burma	50	230	230/440
高棉	Cambodia	50	120	220/380
加拿大	Canada	60	110/220	220/440
智利	Chile	50	220	220/380
中國大陸	China	50	220	220/380
哥倫比亞	Colombia	60	110/220	220/380
歌斯大黎加	Costa Rica	60	120/240	240
古巴	Cuba	60	115/120	240
捷克	Czechoslovakia	50	120/220	220/380
丹麥	Denmark	50	220	220/380
多明尼加	Dominican	60	110/220	220
埃及	Egypt	50	220	220/380
芬蘭	Finland	50	220	220/380
法國	France	50	115/220/127	220/380
德國	Germany	50	110/220	220/380
希臘	Greece	50	220	220/380
格林蘭	Greenland	50	220	220/380
瓜地馬拉	Guatemala	60	120/127/220	220/240
宏都拉斯	Honduras	50	110/220	220
香港	Hong kong	50	110/200/230	200/346
匈牙利	Hungary	50	220	220/380
冰島	Ice Land	50	220	220/380
印度	India	50	230	220/380 230/400

Country		Hz	Voltage	
			single phase	3-phase
印尼	Indonesia	50	127/200	220/380
伊朗	Iran	50	110/220	220/380
伊拉克	Iraq	50	220	220/380
愛爾蘭	Ireland	50	220	220/380
以色列	Israel	50	230	230/400
義大利	i Italy	50	127/220	220/380
日本	Japan	50/60	100/200	200
約旦	Jordan	50	220	220/380
韓國	Korea	60	100/200	200
科威特	Kuwait	60	100/200	200
墨西哥	Mexico	60	127/220	220/380
荷蘭	Netherlands	50	110/220	220/230
紐西蘭	New Zealand	50	230	230/400
尼加拉瓜	Nicaragua	60	120/240	240
挪威	Norway	50	230	230
巴基斯坦	Pakistan	50	230	220/380 230/400
巴拿馬	Panama	60	110/220/120	220/240
秘魯	Peru	60	110/220	220
菲律賓	Philippines	60	110/220	220/440
葡萄牙	Portugal	50	110/190/220	220/380
沙烏地-阿拉伯	Saudi-Arabia	50	127/220	220/380
		60		230/400
蘇格蘭	Scotland	50	240	240/415
新加坡	Singapore	50	115/230	230/400
南非共和國	South Africa Rep	50	220/380	220/380 230/400
西班牙	Spain	50	127/220	220/380
瑞士	Switzerland	50	220	220/380
泰國	Thailand	50	110/220	220/380
土耳其	Turkey	50	127/230/220	220/380
美國	U.S.A.	60	110/220	220/440
英國	United Kingdom	50	2740	240/415
越南	Viet-Nam	50	127/220	220/380

OMAX 常用電壓馬達配綫圖 Wiring drawings

三相六條綫 three phase six wires

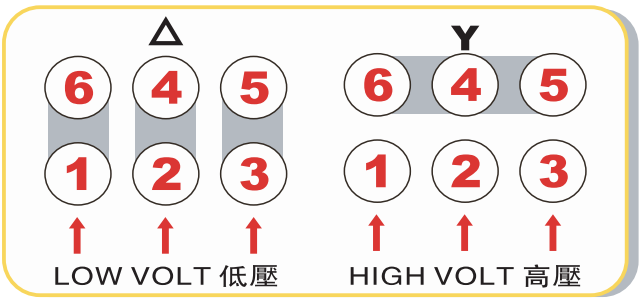

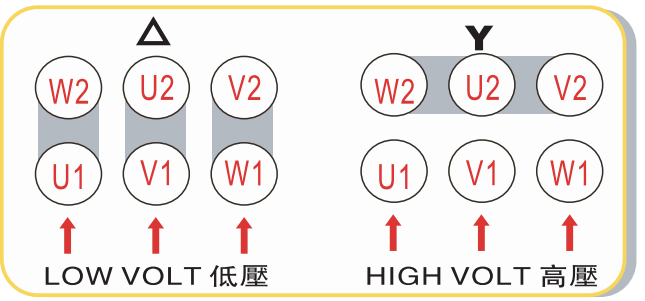

三相九條綫 three phase nine wires

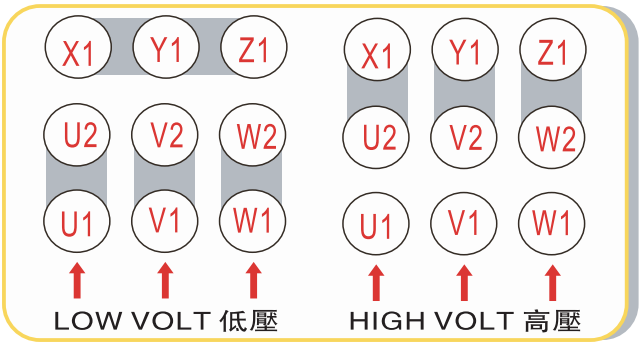

三相 three phase 2P/4P

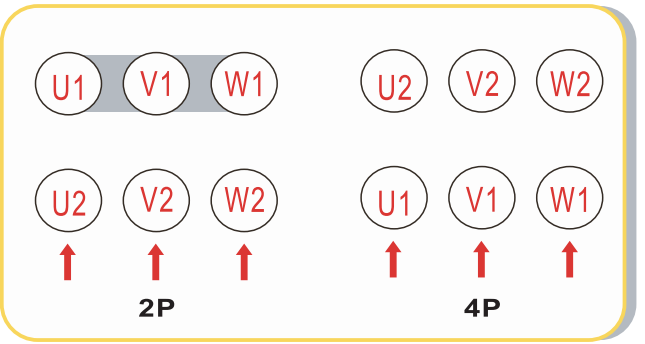

三相12條綫 three phase twelve wires

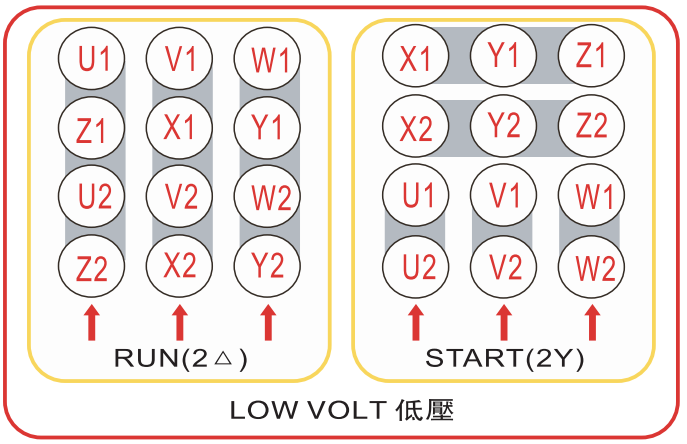

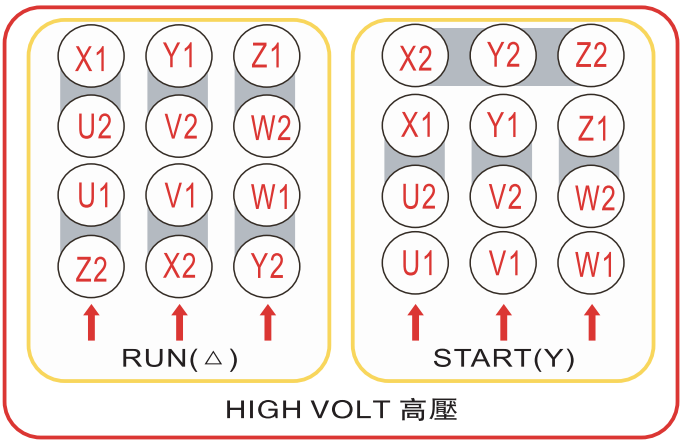

單相四條綫
single phase four wires

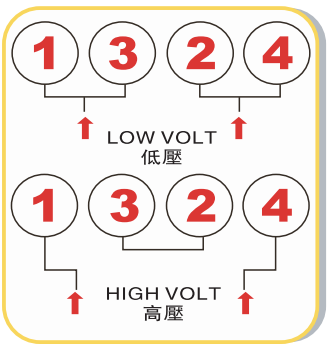
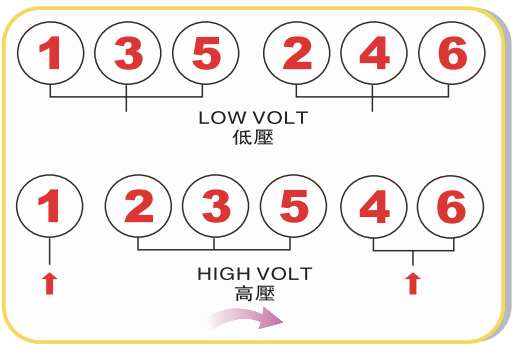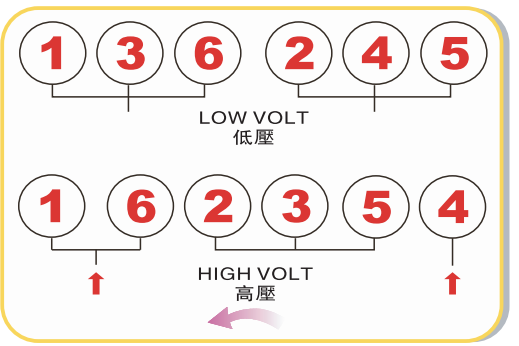
單相六條綫
single phase six wires